Italian National Agency for New Technologies,
Energy and the Environment

Solar Thermodynamic Project

ENEA Research Activities

Solar Collector Assembly Test Loop and Laboratory Studies

M. Vignolini

Research and Development Unit

February 2003

Solar Thermodynamic Project

PCS test loop

Main objectives

- Test the optical and thermal efficiency of the new solar collector assembly under development in ENEA
- Analyze the behavior of the process components (pump, valves, piping…) with molten salt as heat transfer fluid
- Verify the instrumentation, control system and operating procedures (molten salt management)

All the tests will be performed with the same operating parameters (flow, temperature) of the future power plant.

Solar Thermodynamic Project

PCS test loop

Main parameters

- Heat transfer fluid: mixture of molten salt (40% KNO_3 60% $NaNO_3$)
- Normal operating temperature: 290 – 550°C
- Fully operation during night time or cloudy days
- Heat transfer fluid flow: 2 – 6.6 kg/s
- Design pressure: 8.5 bar
- Molten salt volume: 3 m^3
- Maximum thermal power: 500 kW

PCS test loop: layout

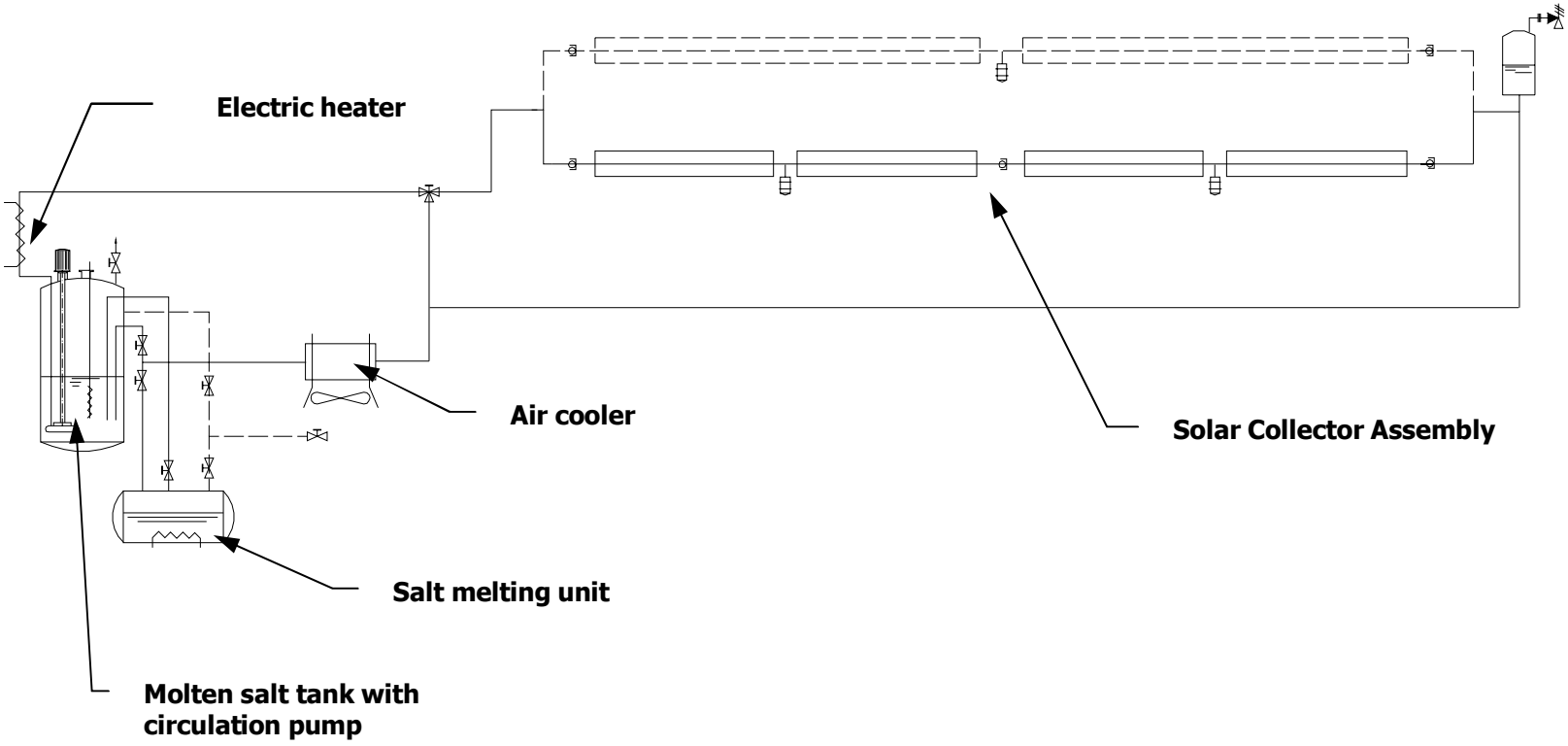

PCS test loop: aerial view

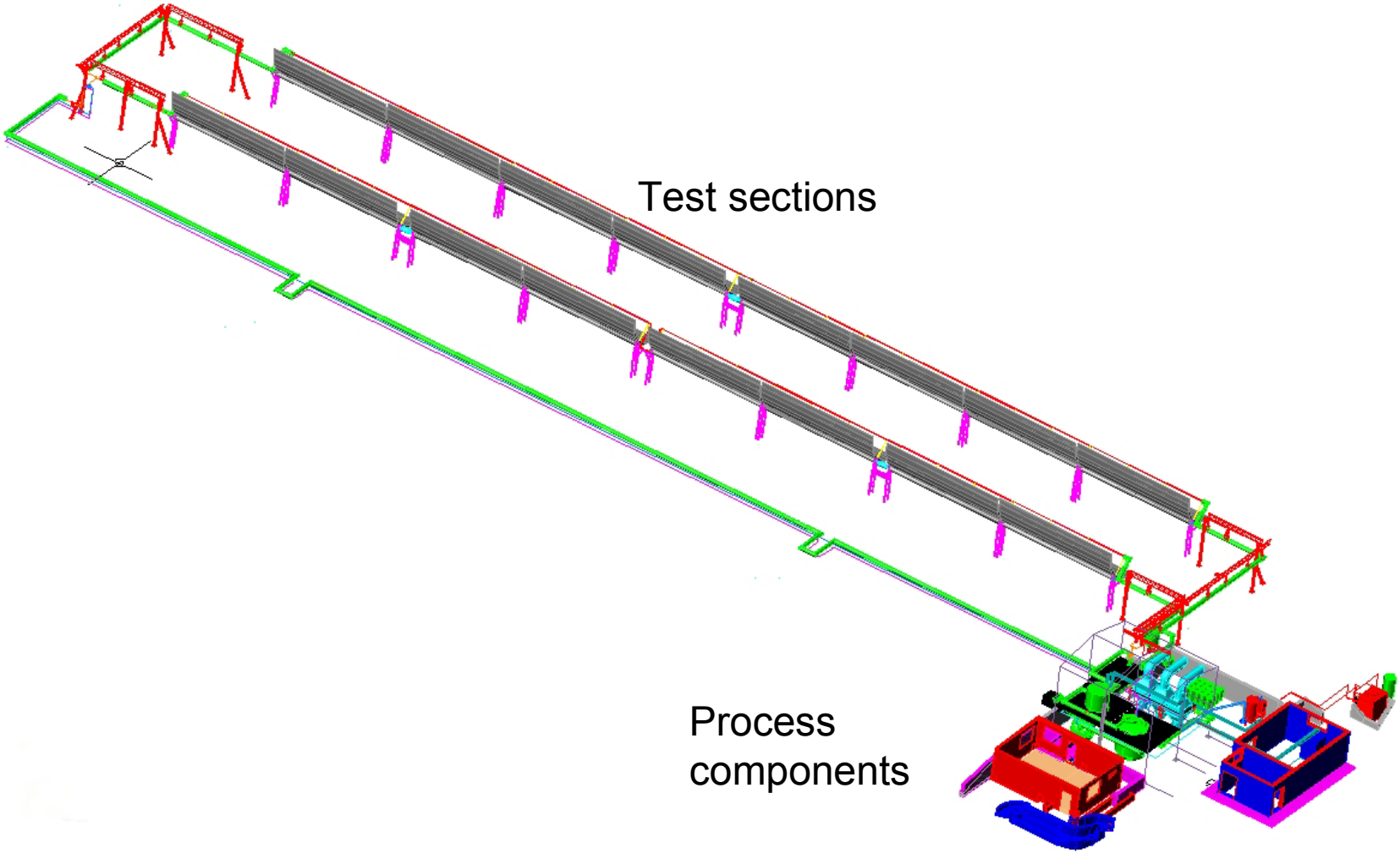

PCS test loop: process components view

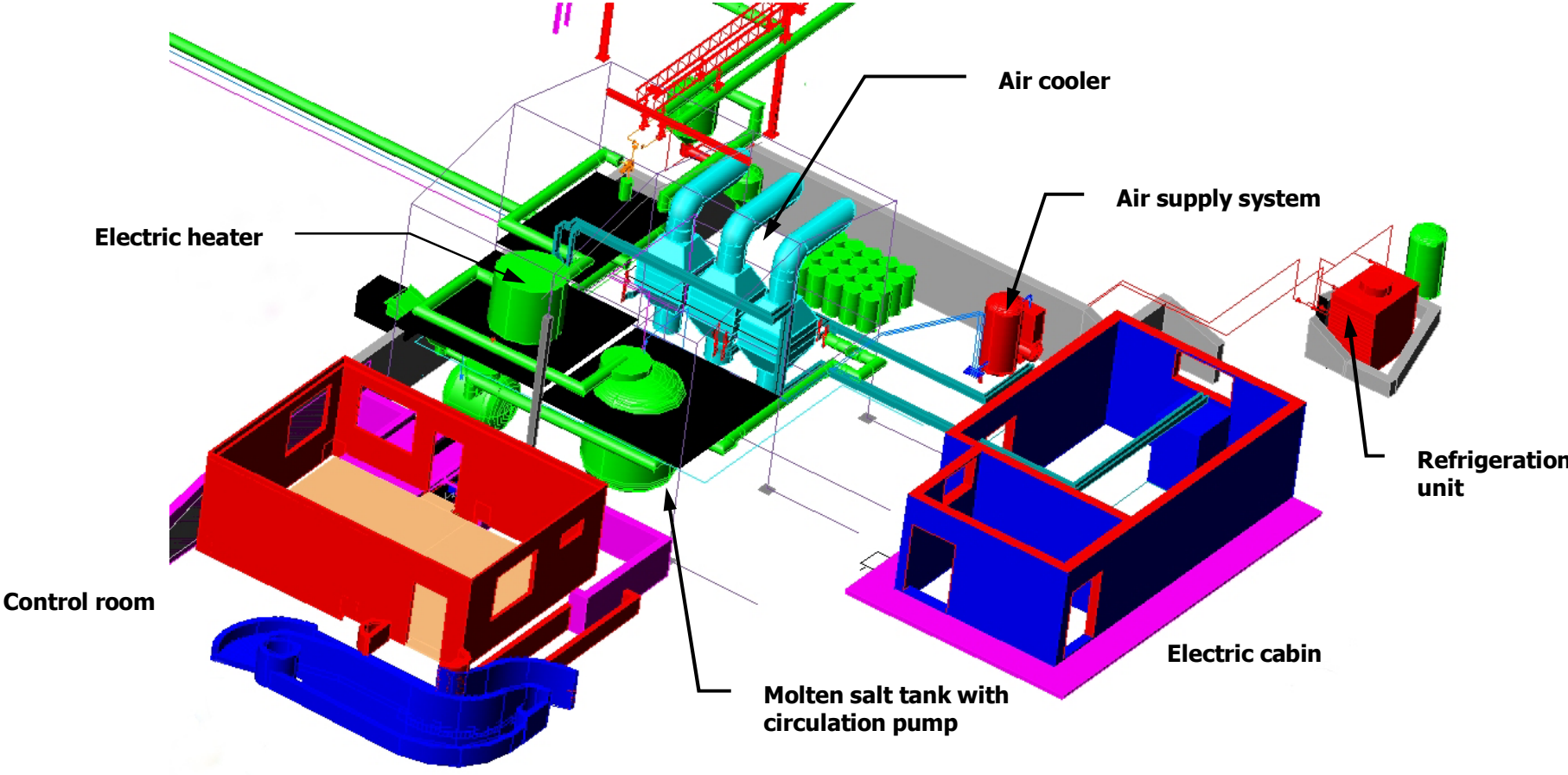

PCS test loop: test section inlet view

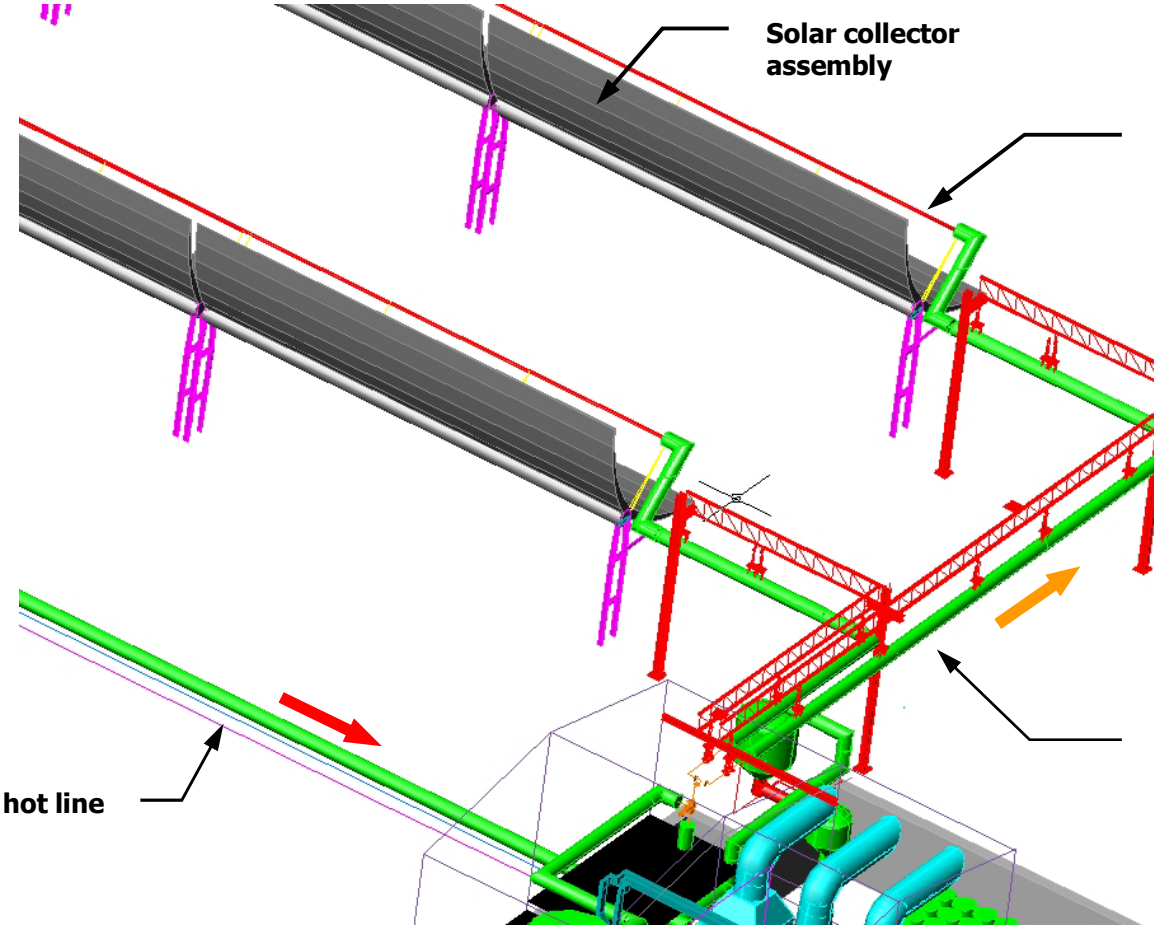

PCS test loop: front view

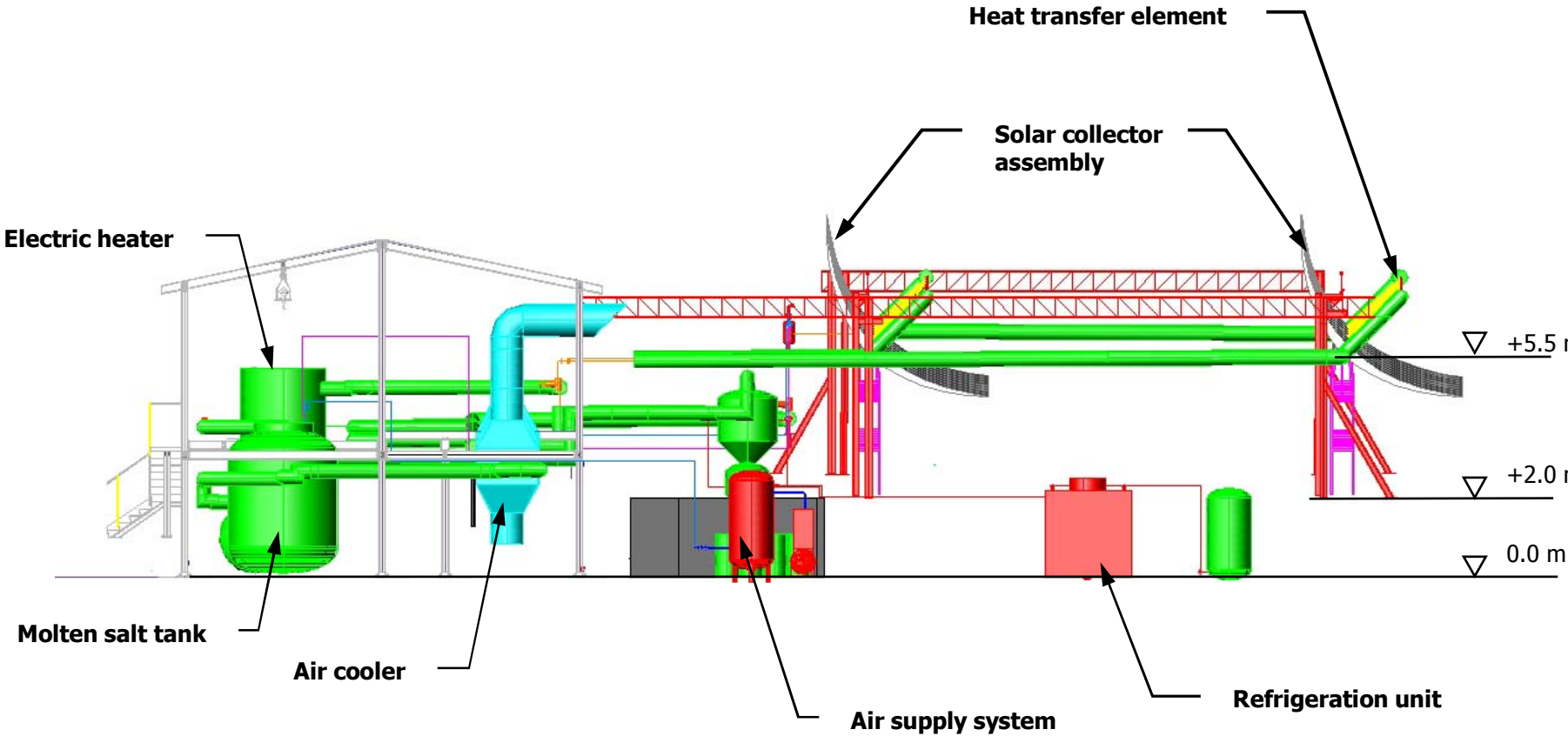

Italian National Agency for New Technologies, Energy and the Environment

Solar Thermodynamic Project

PCS test loop: P&ID

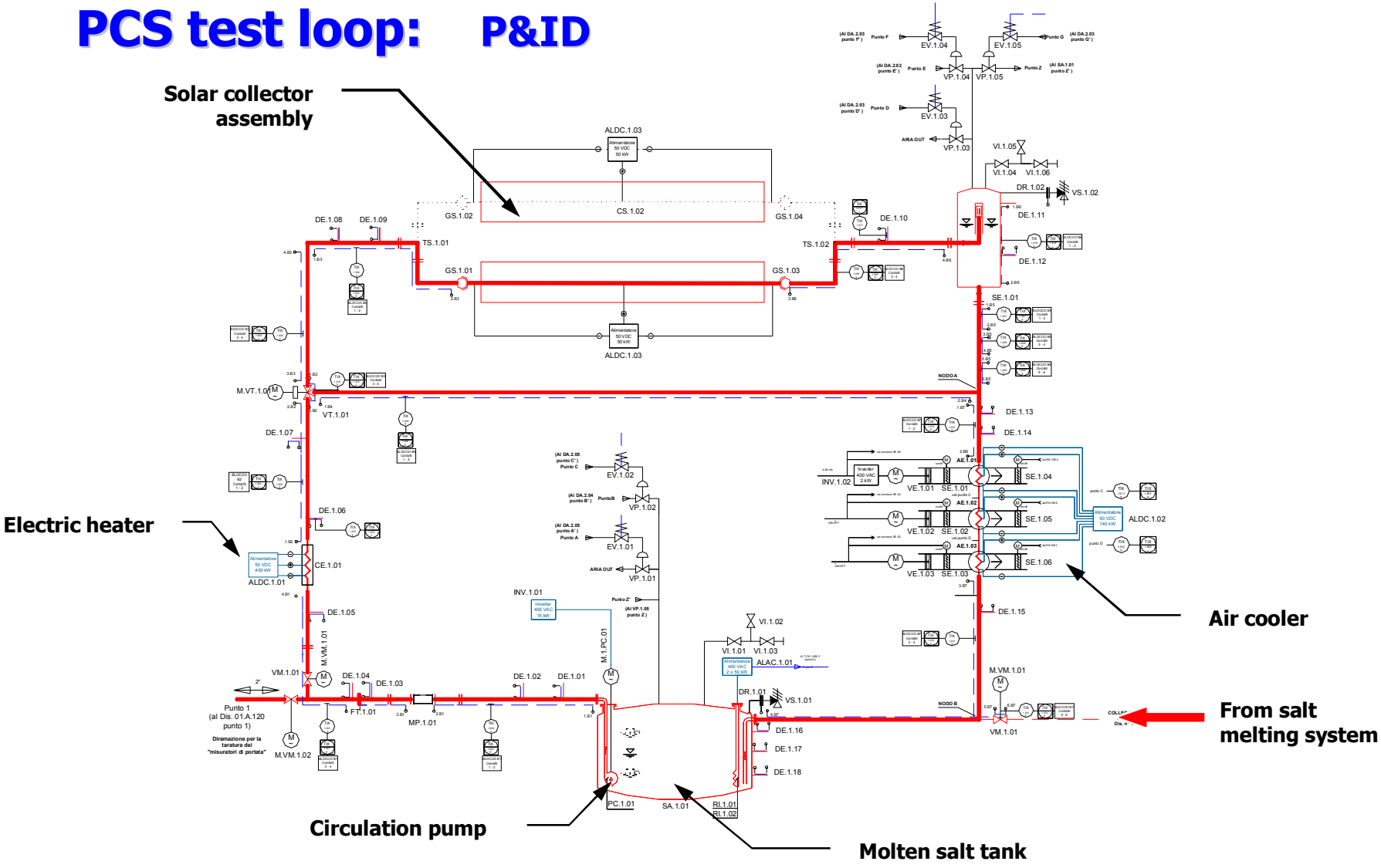

Primary Loop : *Ball Joint* Flanges

Hydraulic Joints between Pipelines and Collectors

Metallic Gasket

REXOR Test Rig

Experimental Assessment for Coating Performances and Calibration on AISI 316L Pipes

MOSE (Molten Salt Experiences) Test Loop

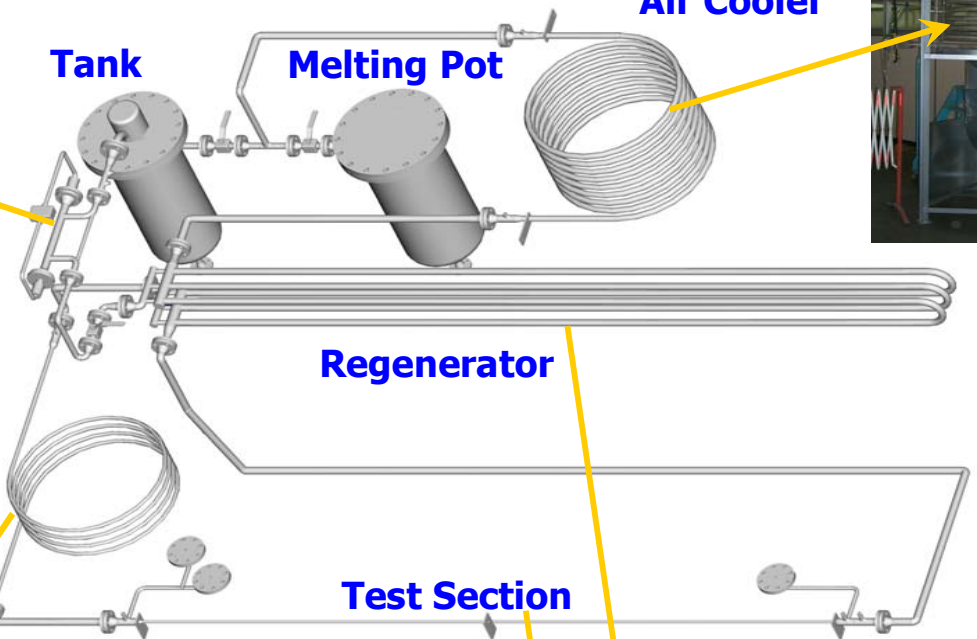

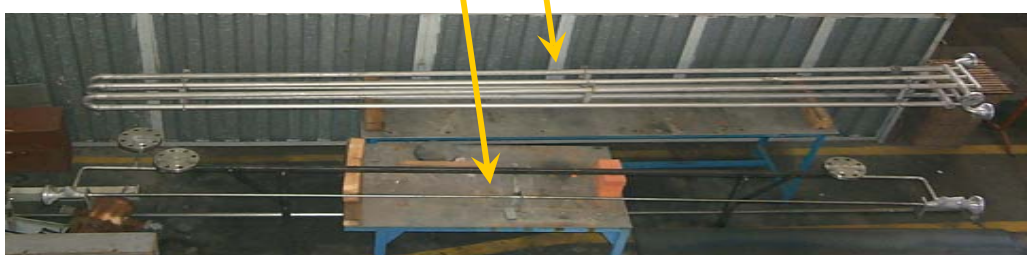

Static and Fatigue Corrosion Testing for Stainless Steel Bathed by Molten Salt

Temperature and Pressure Control

AISI 304 Melting Pot

Welded Samples of AISI 316L after 750 hrs in Contact to Molten Salt at different Temperatures

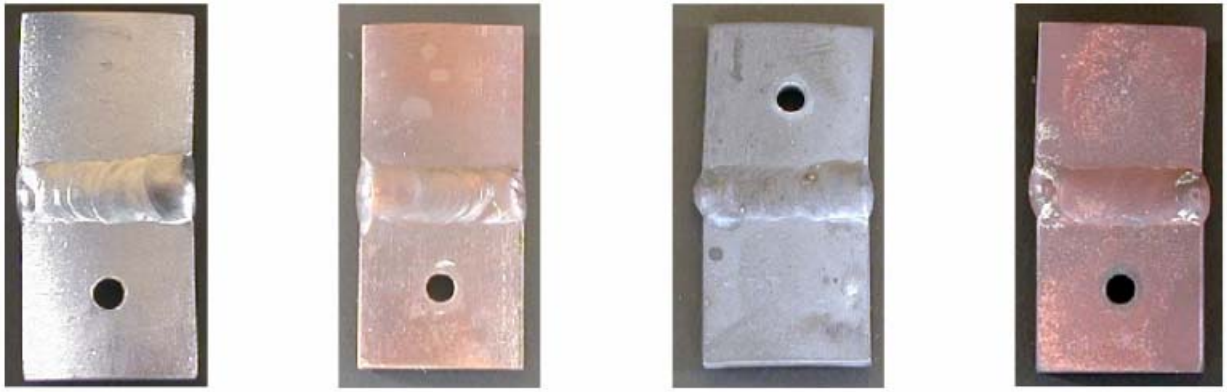

Original Sample 290 °C 550 °C 590 °C

Laboratory Study of Molten Salt Mixtures

Autoclaves for Pressure and Temperature Measurements of Molten Salt at Constant Volume

Mixture of Molten and Solid Salt after 10 Months Exposure on Air

Laboratory Study of Molten Salt Mixtures

Test Section on Molten Salt, Water and Air Interaction:

Measurements of Hydroxides and Carbonates

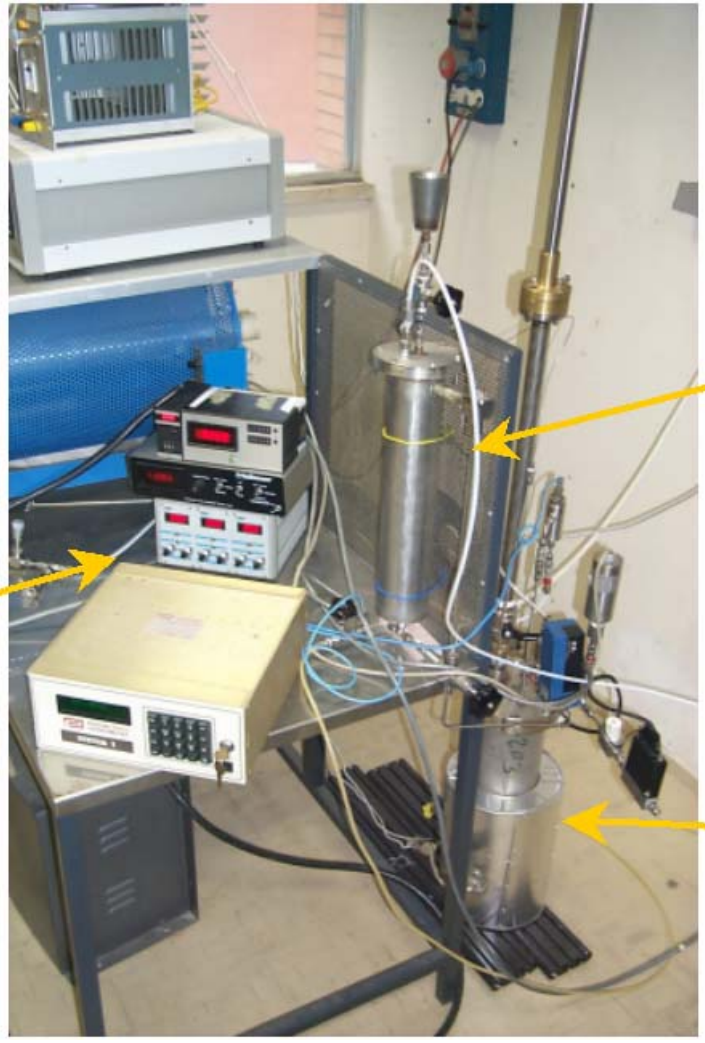

Water/Air Feeding Loop

Gas-chromatograph Control Section

Autoclaves
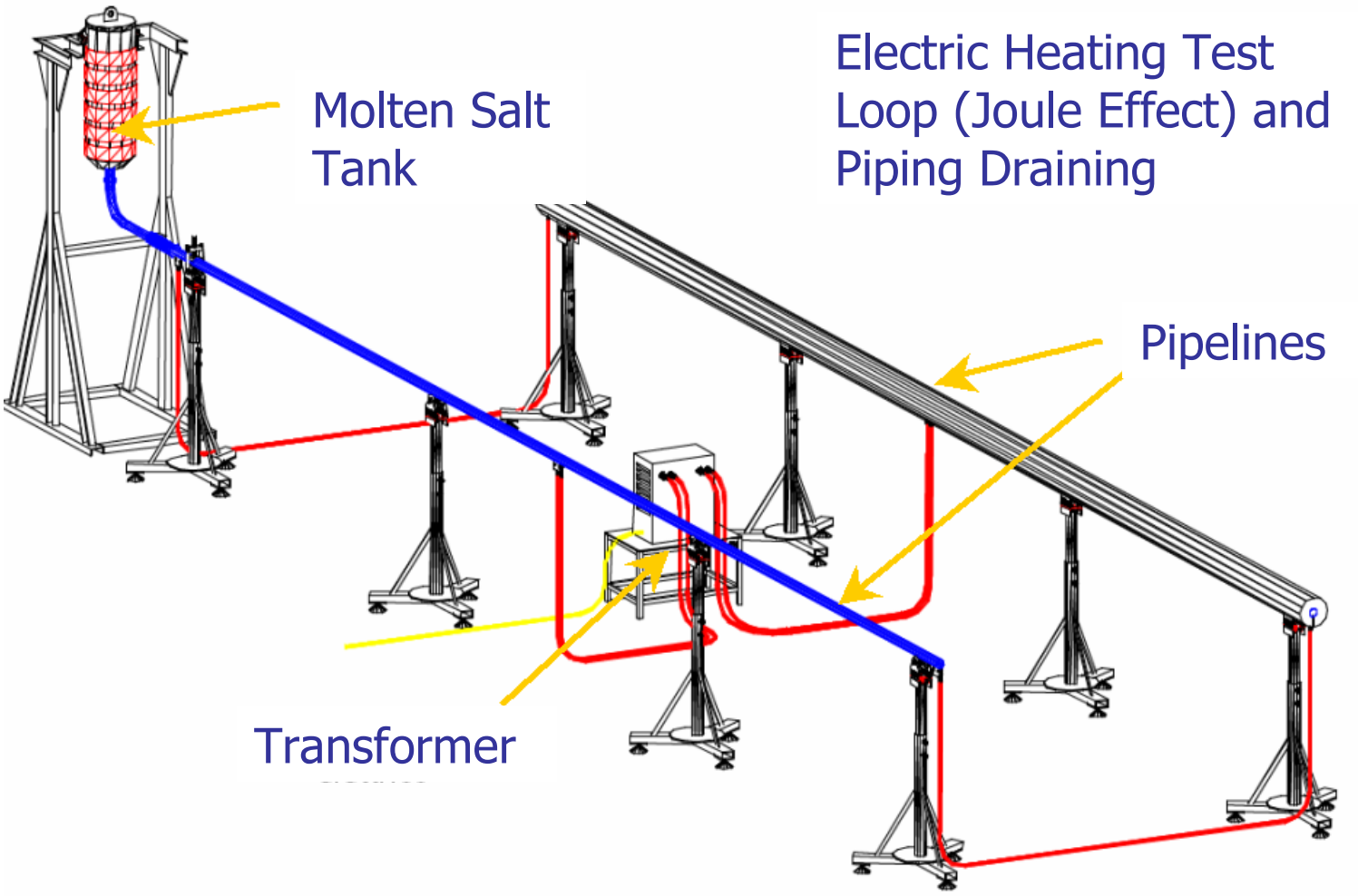
Primary Loop: Heating Line Test