The University of Texas

Reduced Engine Friction and Wear

Ron Matthews, Principle Investigator

(Mike Bryant and Tom Kiehne, Co-PIs)

Tom J. George, Project Manager, DOE/NETL

Ronald Fiskum, Program Sponsor, DOE/EERE

COOPERATIVE AGREEMENT DE-FC26-01NT41337

Awarded 9/30/01, 36 Month Duration

$755,637 Total Contract Value ($557,689 DOE)

Wednesday, April 9, 2003

Project Objectives

Overall objective: decrease piston assembly friction to benefit efficiency, fuel consumption, and durability of LBNGEs. (Also, explore potential to increase burning rate via liner rotation.)

MODELING GOALS

- Improved multi-D model of piston assembly friction
- Extend to include rotating liner (design tool)

EXPERIMENTAL GOALS

- Design, develop, and demonstrate a prototype Rotating Liner Engine

Project Schedule

TASKS

1. Engine tests
   1. Finalize face seal
   2. Construct test engine
   3. Motoring tests
   4. Prepare for firing tests
   5. Unloaded firing tests
   6. Loaded firing tests
2. Modeling
   1. Formulate eqns.
   2. Form. num. methods
   3. Coding/testing
   4. Conv. piston sims.
   5. RLE simulations

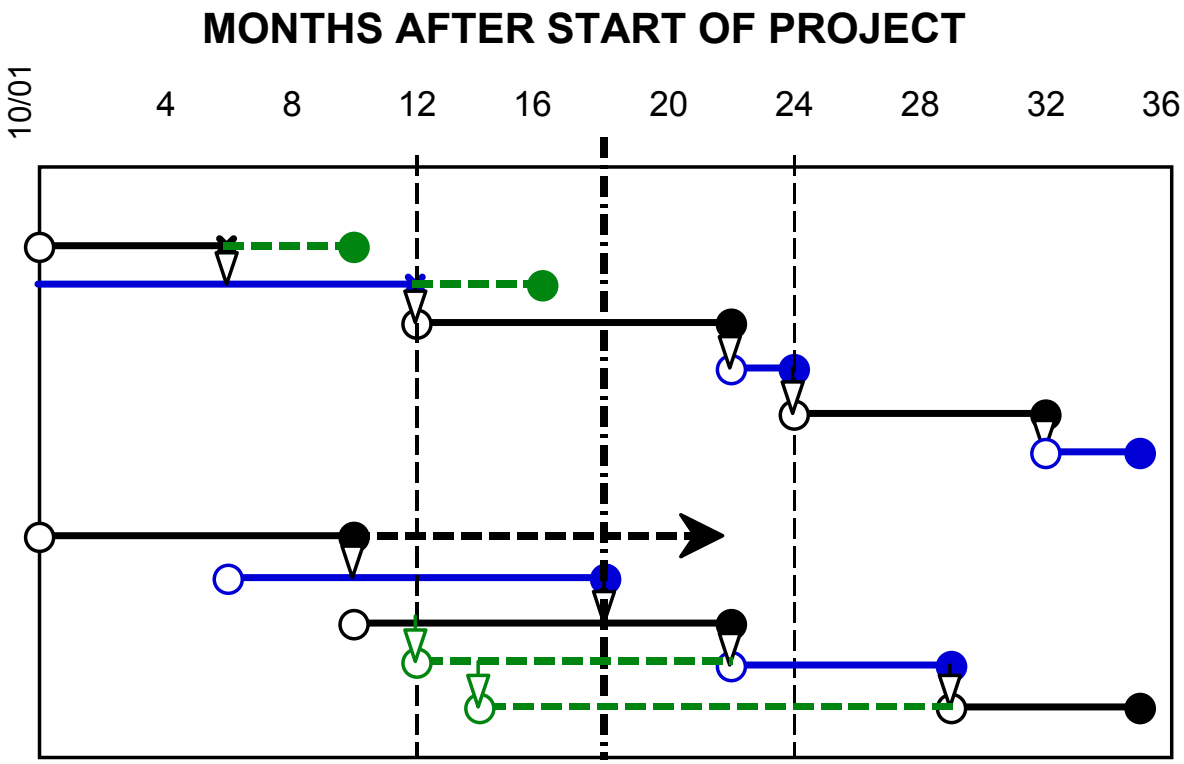

Accomplishments

MODELING TASKS

- Initial model for conventional piston ring friction completed (needs more work)
- Initial model for RLE completed (needs more work)

EXPERIMENTAL TASKS

- Face seal “finalized” and tested in bench rig
- Prototype RLE constructed
- Motoring tests begun

Technical Approach and Results

Concept

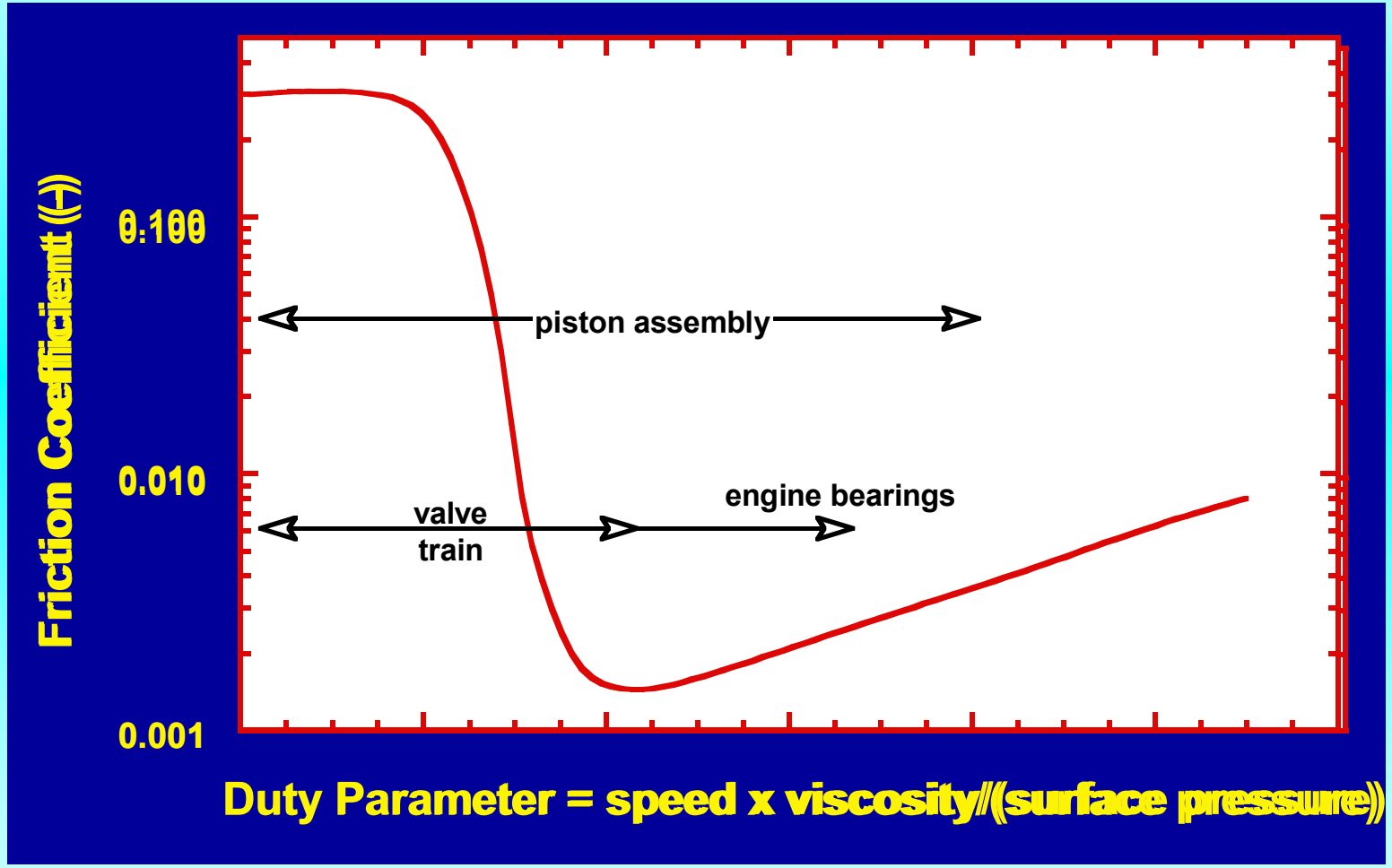

Technical Approach and Results

Concept

If the problem is that the piston stops during the high pressure part of the cycle, the solution is to never allow the relative speed between the rings and liner slow to zero – ROTATE THE LINER

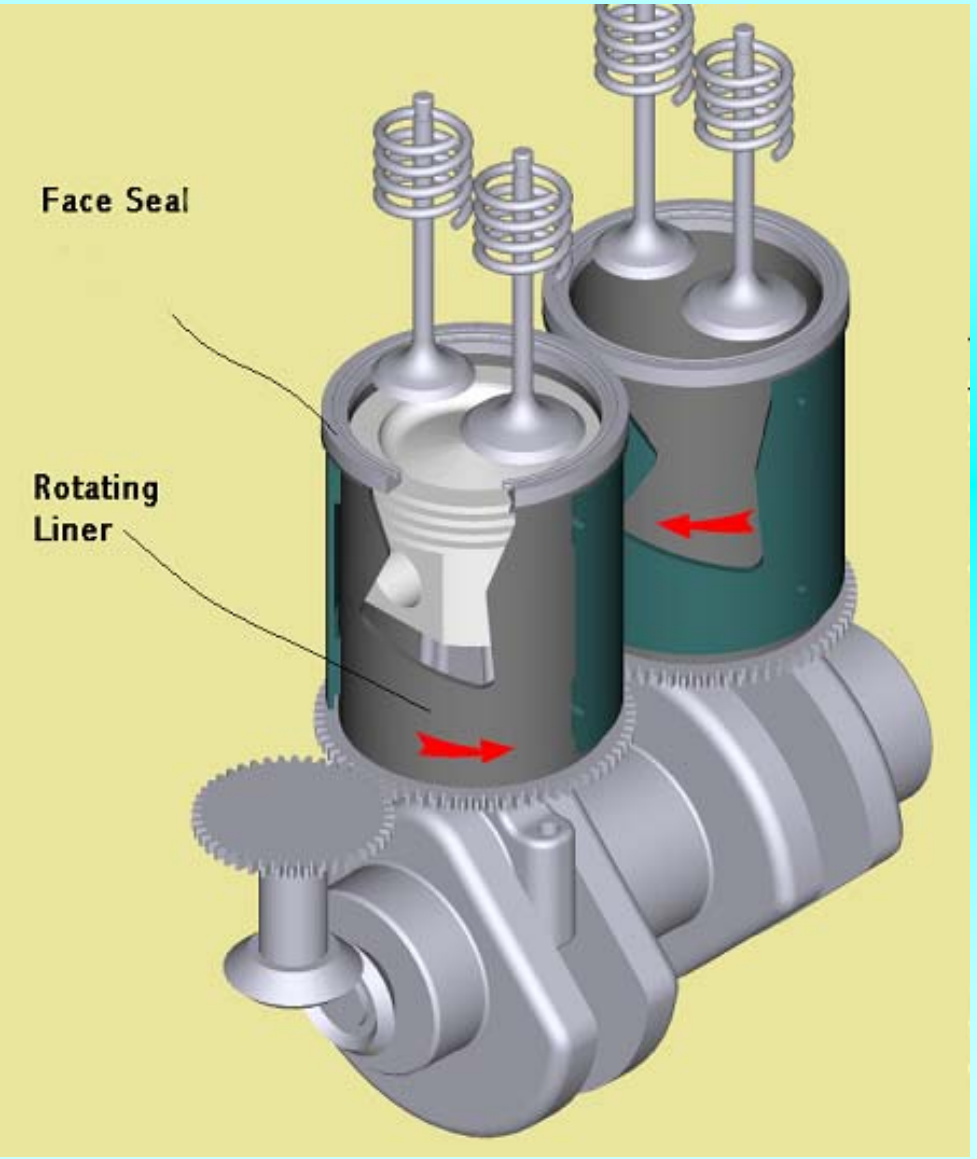

Technical Approach and Results

Concept

A highly successful British aero-engine design that served in large numbers during WW2 (>150,000 aircraft, 1500-3000 hp, up to 500 psi BMEP, record durability)

Bristol SVE

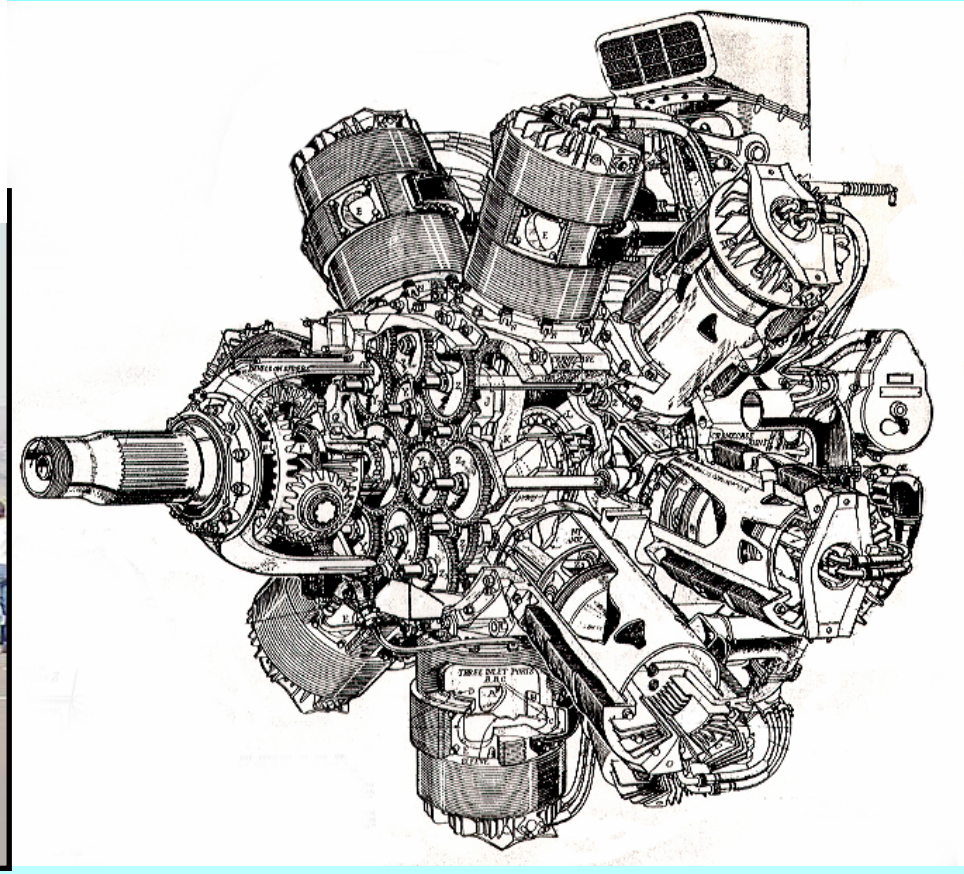

Technical Approach and Results

Concept

- Liner rotation eliminates piston ring boundary-mixed lubrication, similar to SVE's
- Modeling shows that energy saved by liner rotation is an order of magnitude higher than liner parasitic losses
- Improved brake thermal efficiency via friction reduction ~5% for typical LBNGE operating conditions
- Added benefits:
  - Tolerance to even higher BMEP operation (based on SVE experience) => even higher efficiency gains
  - Possible elimination of anti-wear additives => longer life for aftertreatment devices

Technical Approach and Results

Conventional ring friction model

Multi-D models cannot accurately predict ring/liner friction when in the boundary lubrication regime.

Why not? Bore distortion appears to be important. Piston ring tilt? Piston side motion?

Effects of bore distortion on oil film thickness

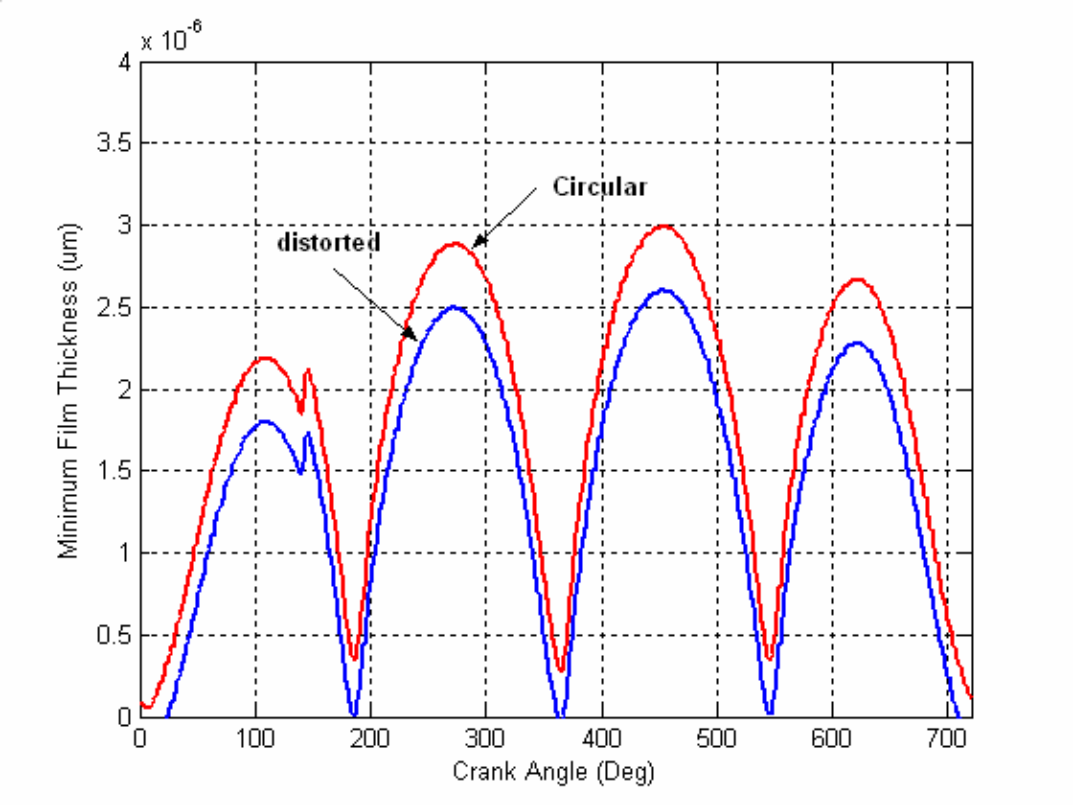

Technical Approach and Results

Conventional ring friction model

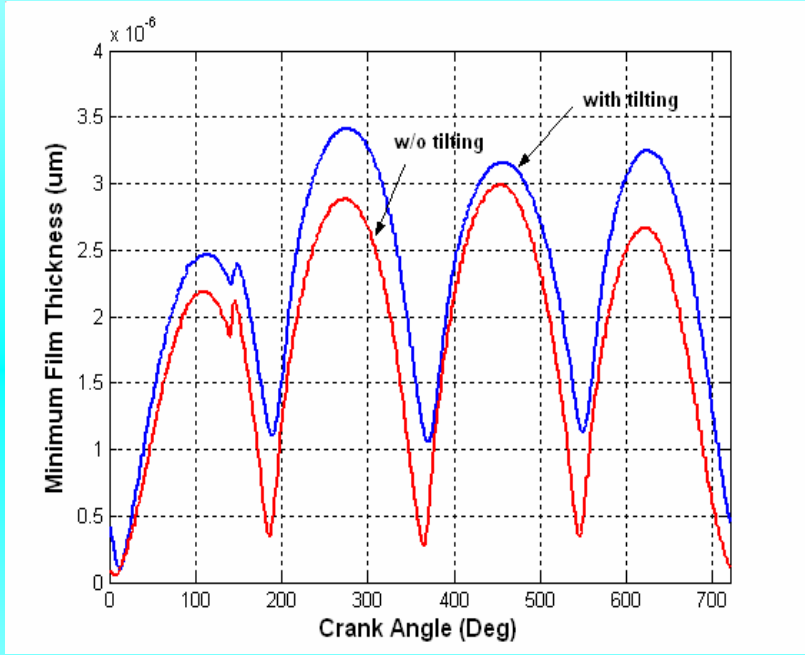

Effects of ring tilt on oil film thickness

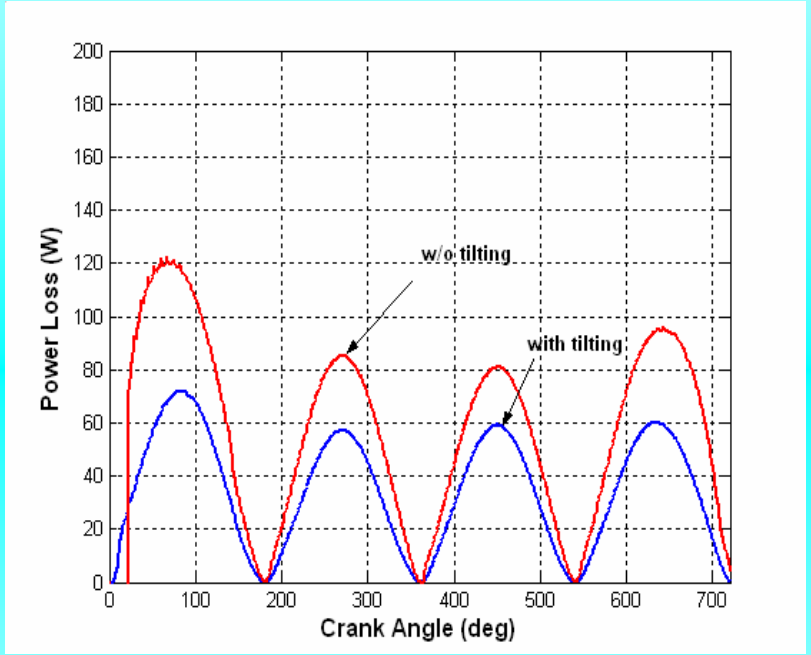

Effects of ring tilt on friction power

Technical Approach and Results

MODEL: Extension to the RLE

How/why does liner rotation work? Parallel sliding mechanism? Extremely complicated, observed but not well understood.

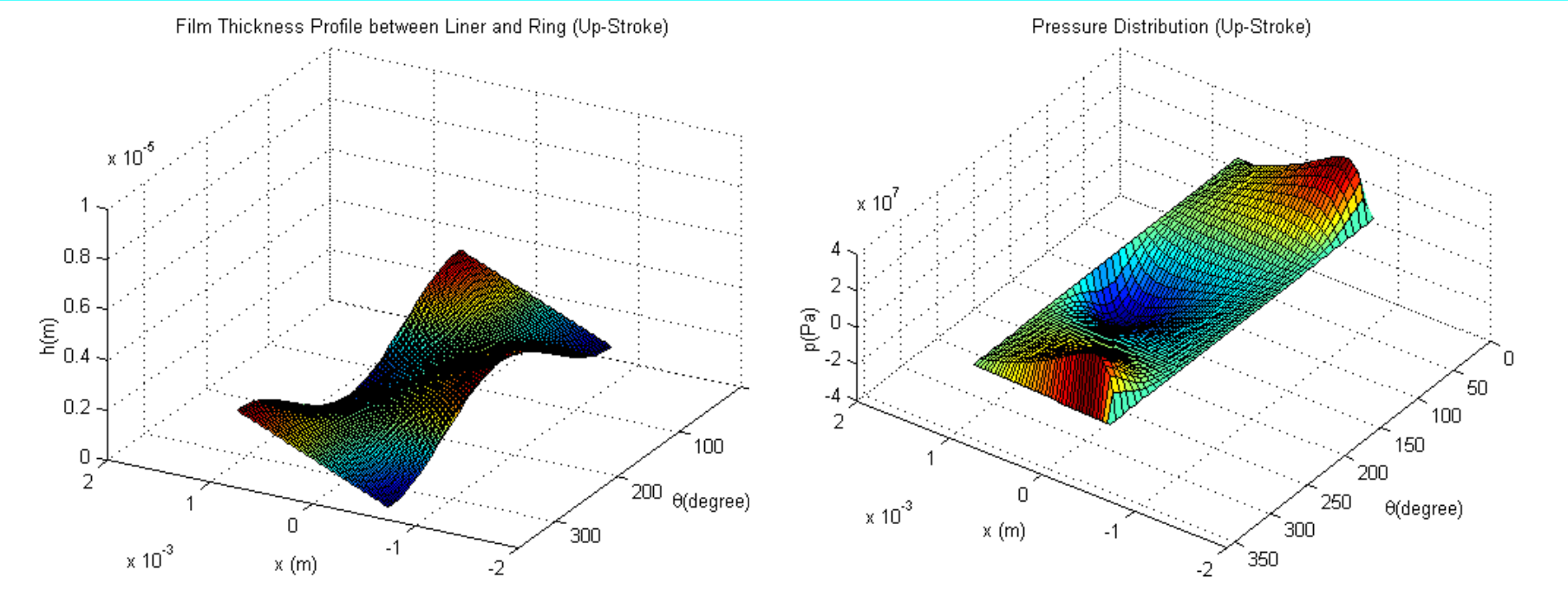

Film thickness profile with low crown RLE piston ring

hydrodynamic pressure distribution for RLE piston ring

Technical Approach and Results

Face seal development

Sole technical challenge is dynamic seal between stationary head and rotating liner

- Seal requirements:

  Seal combustion chamber **gases** with lower blowby than through the piston rings

  Operate in hydrodynamic lubrication regime (**low friction**, without metal-to-metal contact = no wear)

  Minimum/**no** lubricating **oil leakage** into the combustion chamber

- Models used for development of seal:
  - FEA RLE seal model - combines thermal/mechanical distortions with hydrodynamic calculations; used to optimize design to meet above criteria.
  - SolidWorks plus Fluent3D – oil flow between seal and rotating liner
  - Fluent3D plus UT-FES/RPEMS – heat flux and temperature distributions in seal (and rotating liner)

Technical Approach and Results

CURRENT FACE SEAL DESIGN

- Seal combines a step pad thrust bearing with a face seal.
- Inner section is flat and seals combustion gases and oil
- Thru-holes supply oil to annular and radial grooves, which lubricates the step bearing pads
- A relatively high preload ensures oil control by maintaining low film thickness even when there is no gas pressure.
- Gas pressure closes the sealing gap, but the low balance ratio allows very high gas pressure with no metal-to-metal contact

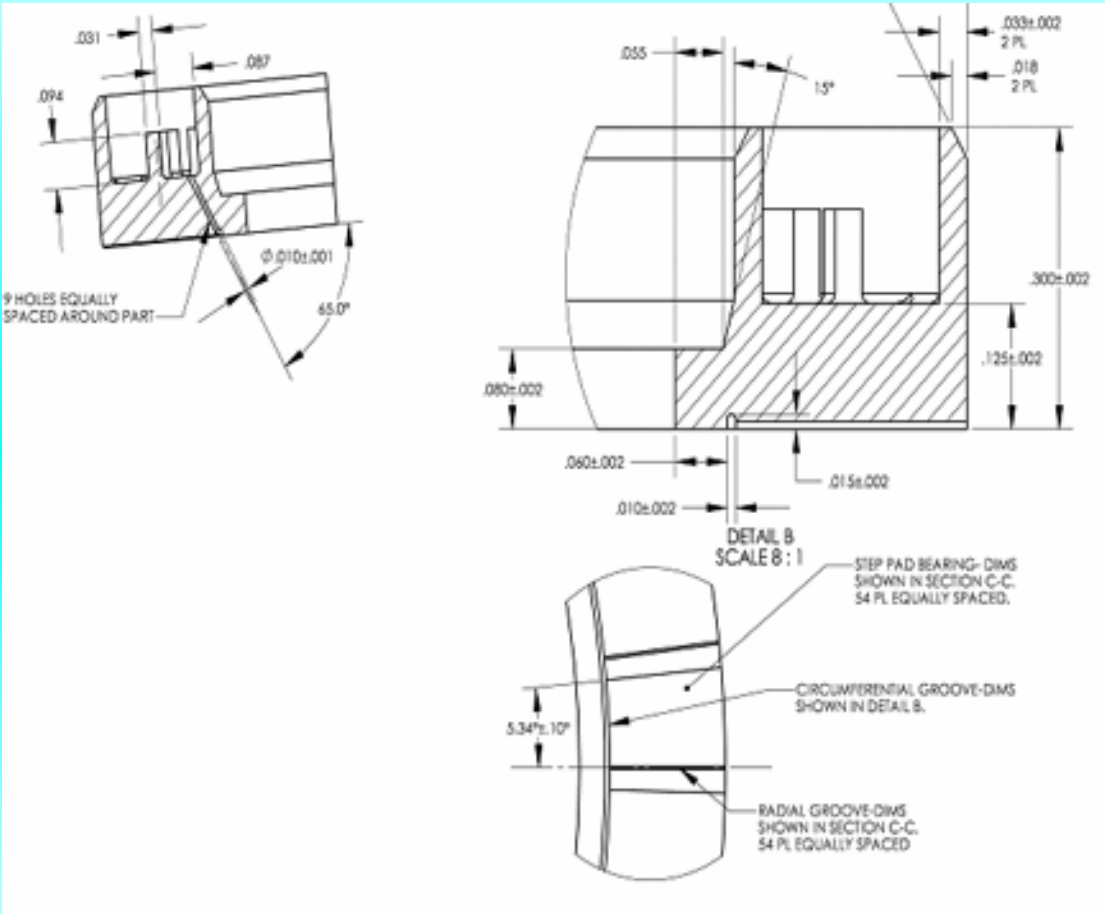

Technical Approach and Results

RLE face seal model

- Software combines thermal and mechanical distortions and hydrodynamic calculations
- Dynamic nature of loading including squeeze film effects considered
- Software used to ensure the design requirements of the seal are met.
- Predicted friction ~ 10-15 Watts

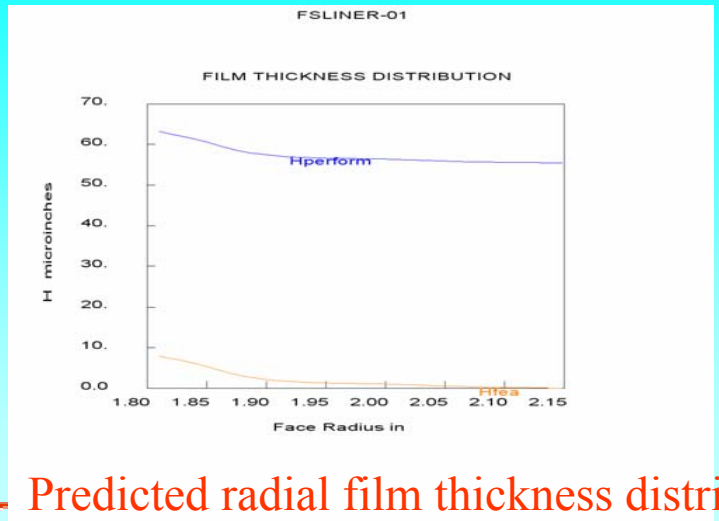

Predicted radial film thickness distribution

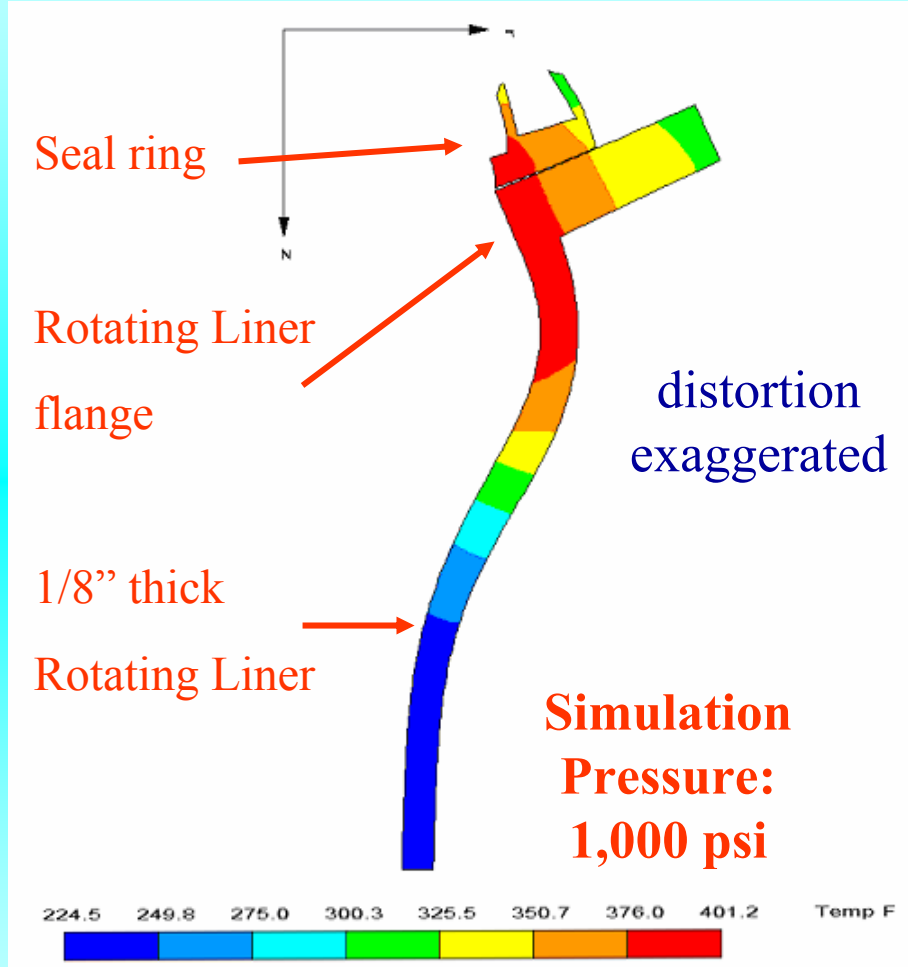

Technical Approach and Results

MODELING FOR RLE DEVELOPMENT

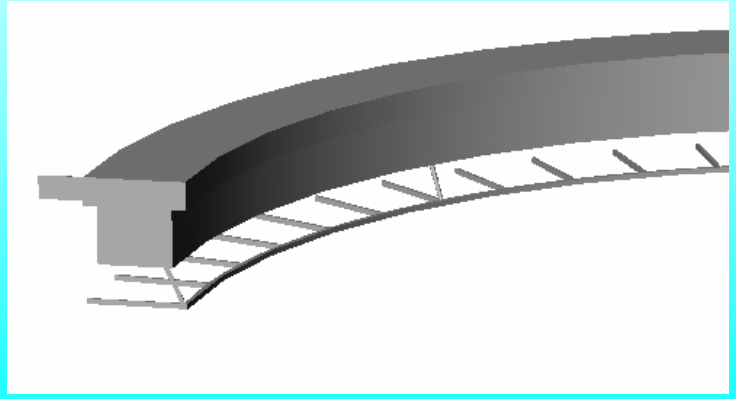

SolidWorks model: For examining oil flow on face seal

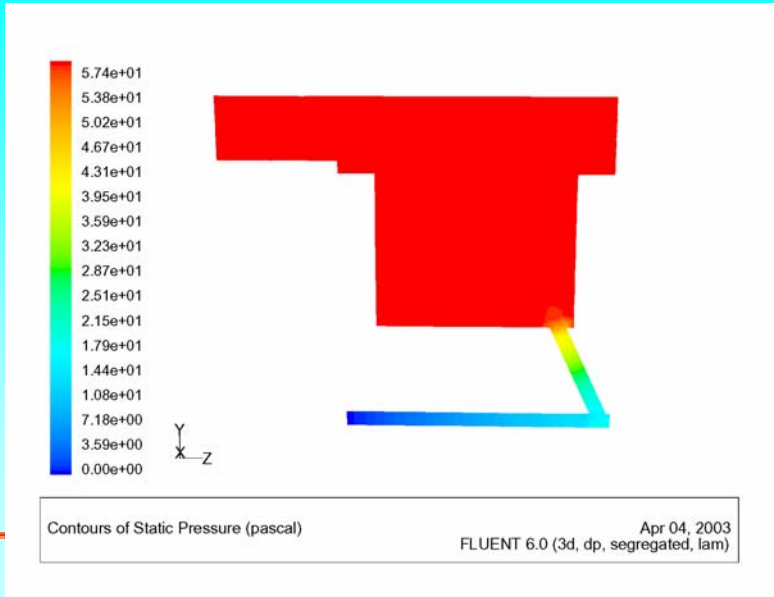

Fluent output: Pressure distribution

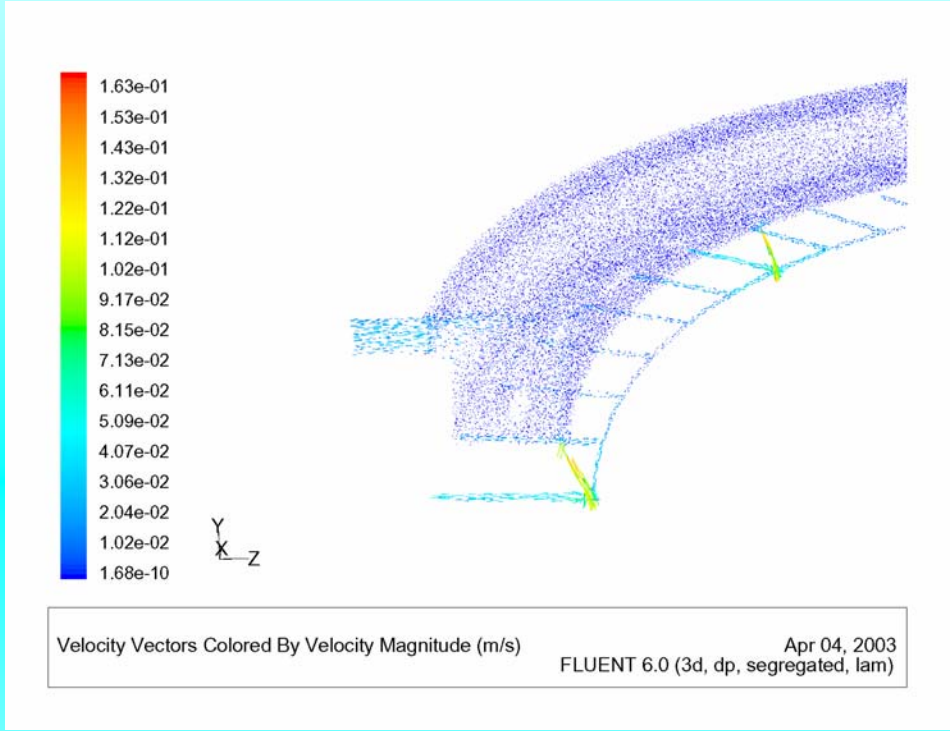

Fluent output: Velocity distribution

Oil-flow simulation with Fluent 3D

(Oil flow space around the head-seal)

- Pressure distribution
- Velocity distribution
- Flow rate prediction: CFD – 19.44 L/hr; exp. – 21.5 L/hr

Technical Approach and Results

MODELING FOR RLE DEVELOPMENT

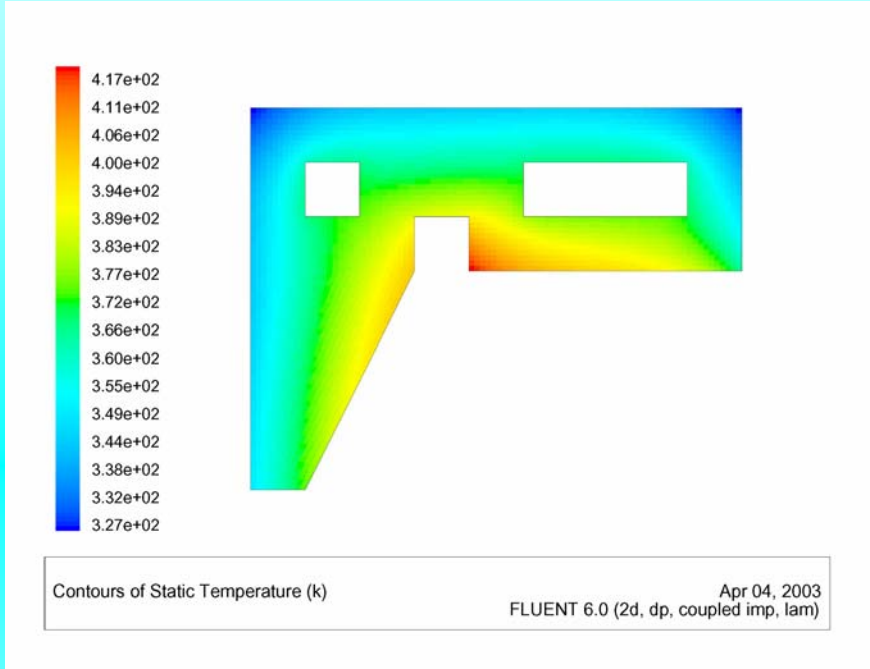

Temperature distribution in seal: Simplified test case

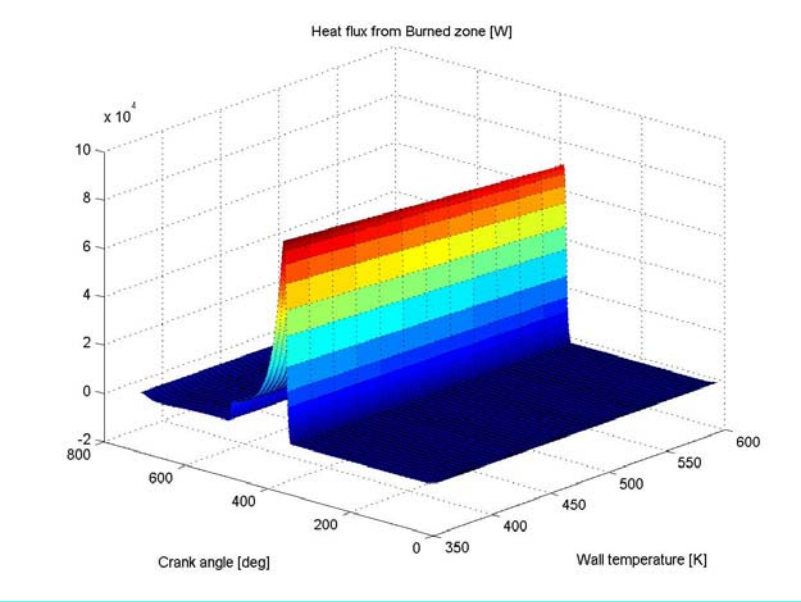

UT-FES/RPEMS output: Predicted heat flux vs crank angle and wall temperature

Heat transfer simulation
(Liner and combustion chamber)

- Temperature distribution prediction
- Heat flux boundary condition updated after each iteration based on output from a quasi-dimensional engine simulation code (UT-FES/RPEMS)
- Simulation results to be used to compare temperature distributions within seal for alternative designs

Technical Approach and Results

EXPERIMENTS

- 4 cylinder engine converted to a single
- RLE is cyl. #2
- Sealing ring visible on periphery of combustion chamber in head for cyl. #2
- Rotating liner driven via electric motor (via cyl. #1) to allow varying liner speeds

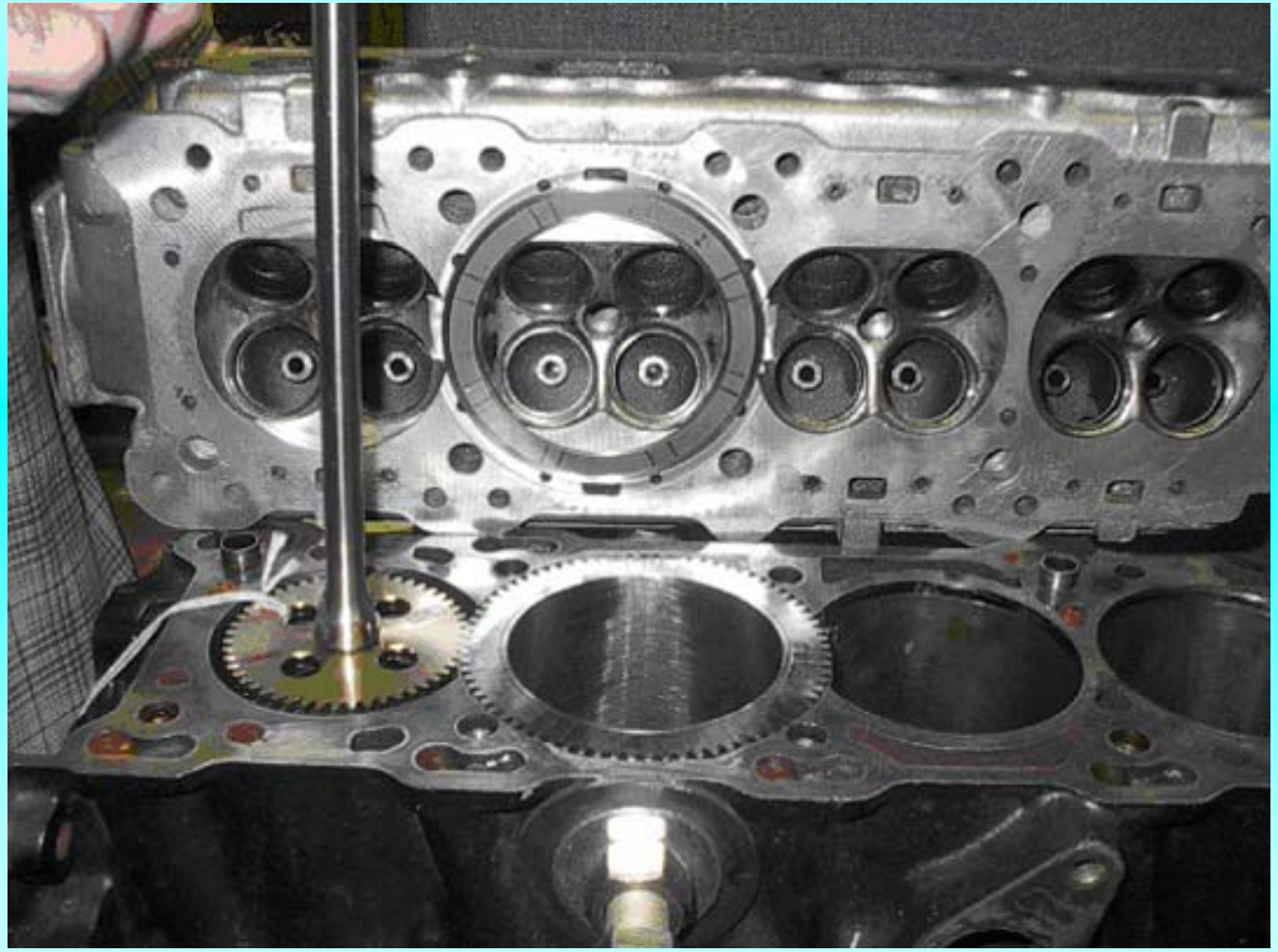

Technical Approach and Results

EXPERIMENTS

- Motoring peak pressure a bit higher than baseline engine
- Sealing effectiveness appears to be perfect
- Preliminary total rotating liner friction within model predictions.
- Currently repairing leakage of coolant into oil

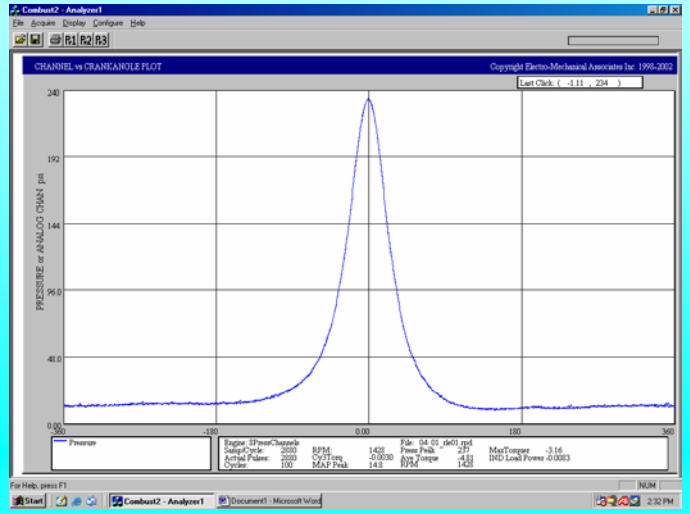

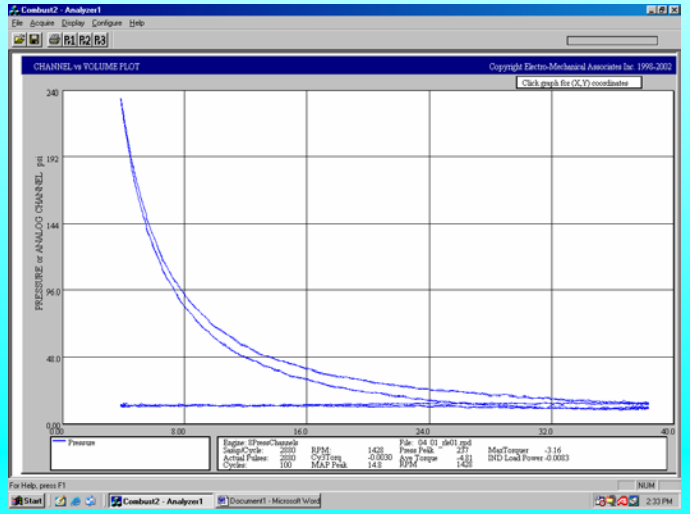

RLE, 1427 rpm, peak pressure = 235 psi

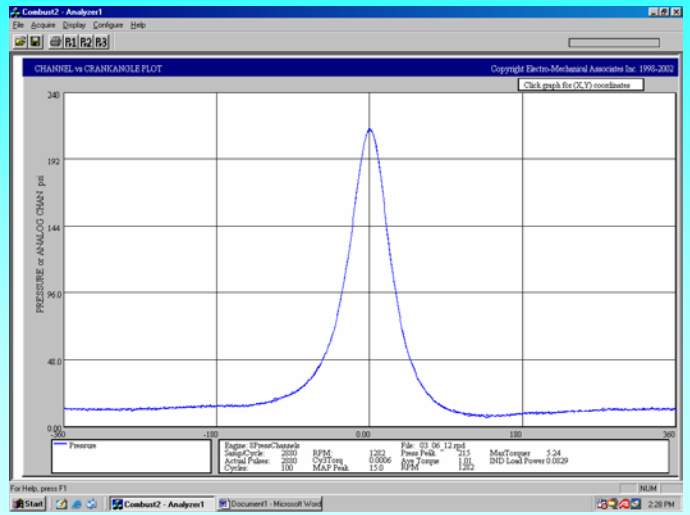

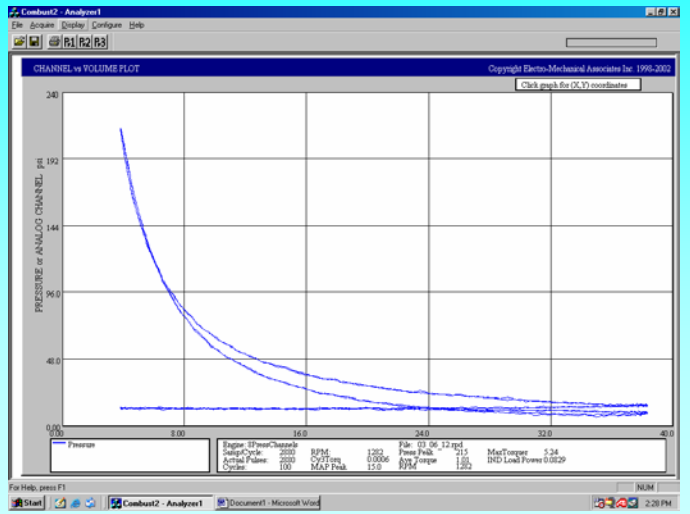

baseline, 1280 rpm, peak pressure = 213 psi

Project Team

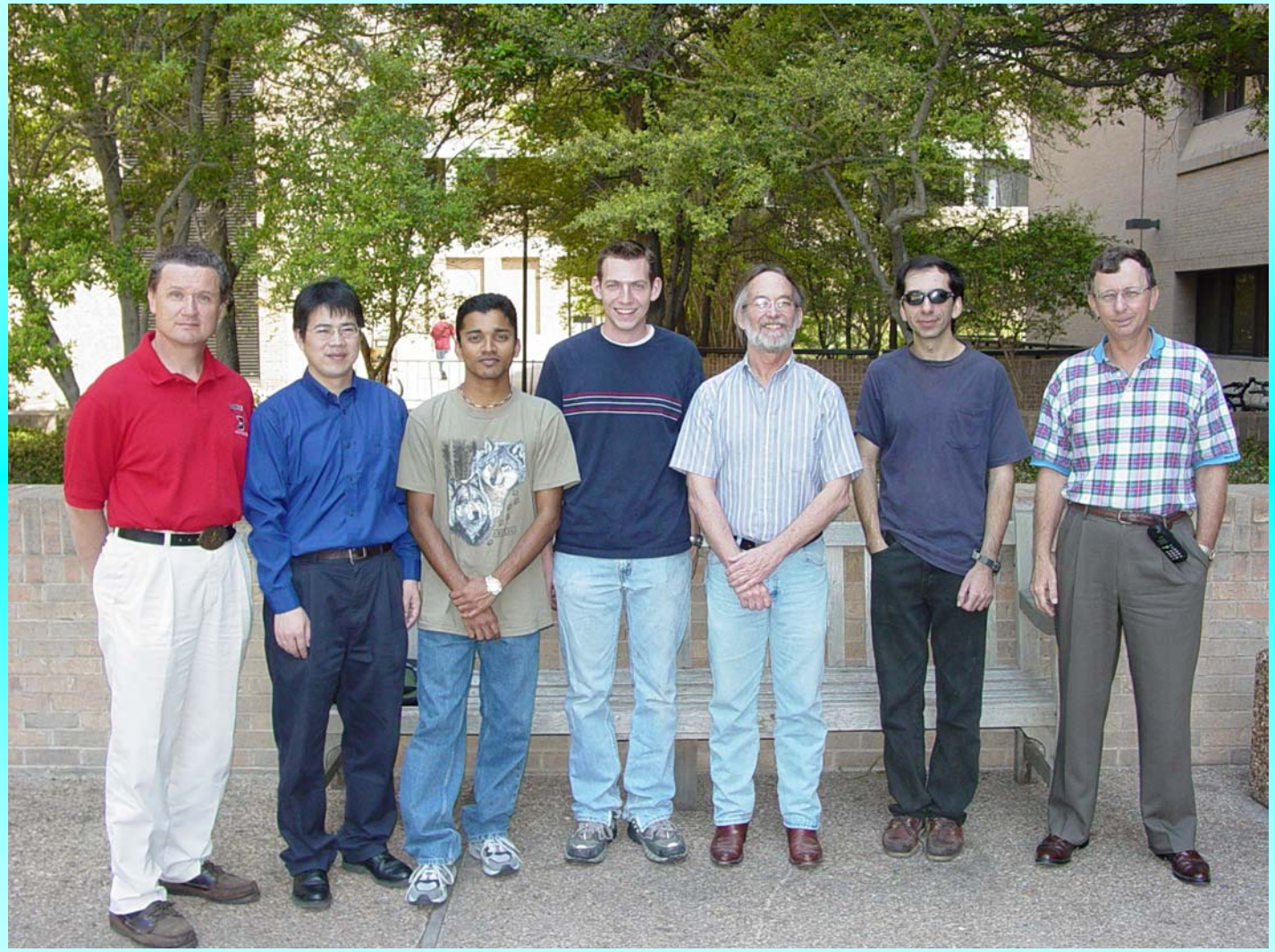

L-R: Prof. Mike Bryant, Huijie Xu (PhD), Sujesh Thomas (MS), Andrew Chandler (MS), Prof. Ron Matthews, Dimitri Dardalis (PhD), Prof. Tom Kiehne.

Not shown: Robert Pearsall and Chris Oehme (UGs)

UT Engines Research Program Capabilities

- Multi-D modeling
- Quasi-D engine modeling
- Chemical kinetics
- Optical engine, combustion bomb
- Laser diagnostics, real-time AF in spark gap, real-time HCs (Fast-Spec), real-time CO2/EGR, real-time PM
- High speed engine data acquisition systems (3)
- 9 engine dynos, 10-1200 hp
- Chassis dyno
- Horiba emissions bench, Rosemount emissions bench, 3 GCs, FTIR

Summary

Objectives:

- Improved model for conventional ring/liner friction, possible extension to include skirt
- Extension to rotating liner (design tools)
- Design, develop, and demonstrate a prototype RLE

Accomplishments thus far:

- Initial model for conventional piston ring friction completed (needs more work)
- Initial model for RLE completed (needs more work)
- Face seal "finalized" and tested in bench rig (simulations show no metal-to-metal contact to >2000 psi)
- Prototype RLE constructed (seal appears to be working even better than predicted)
- Motoring tests begun

Questions???

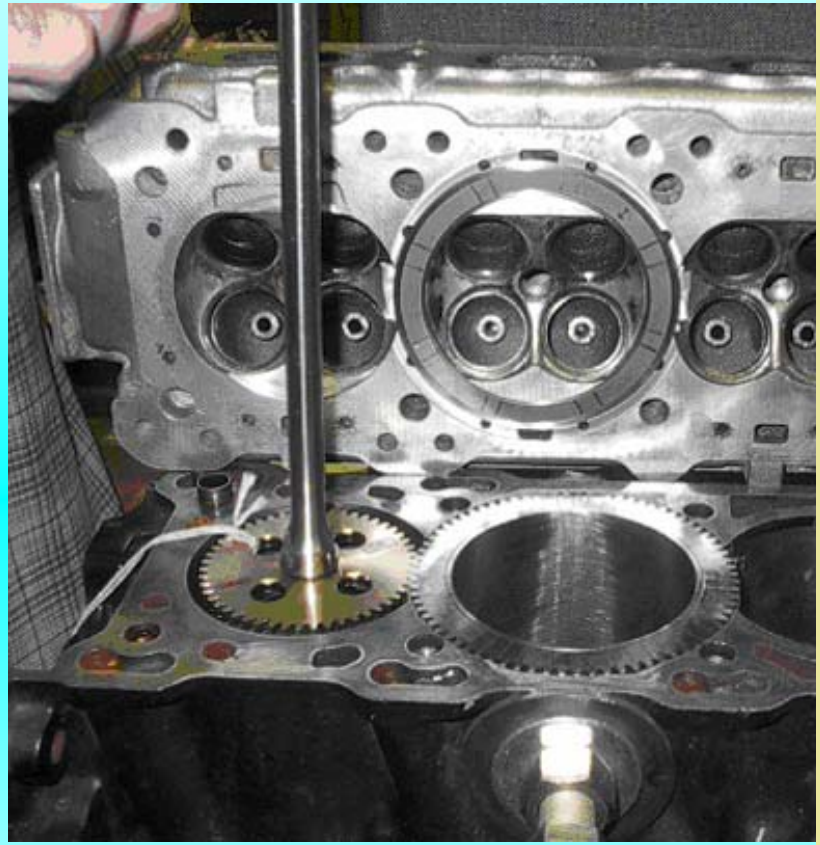

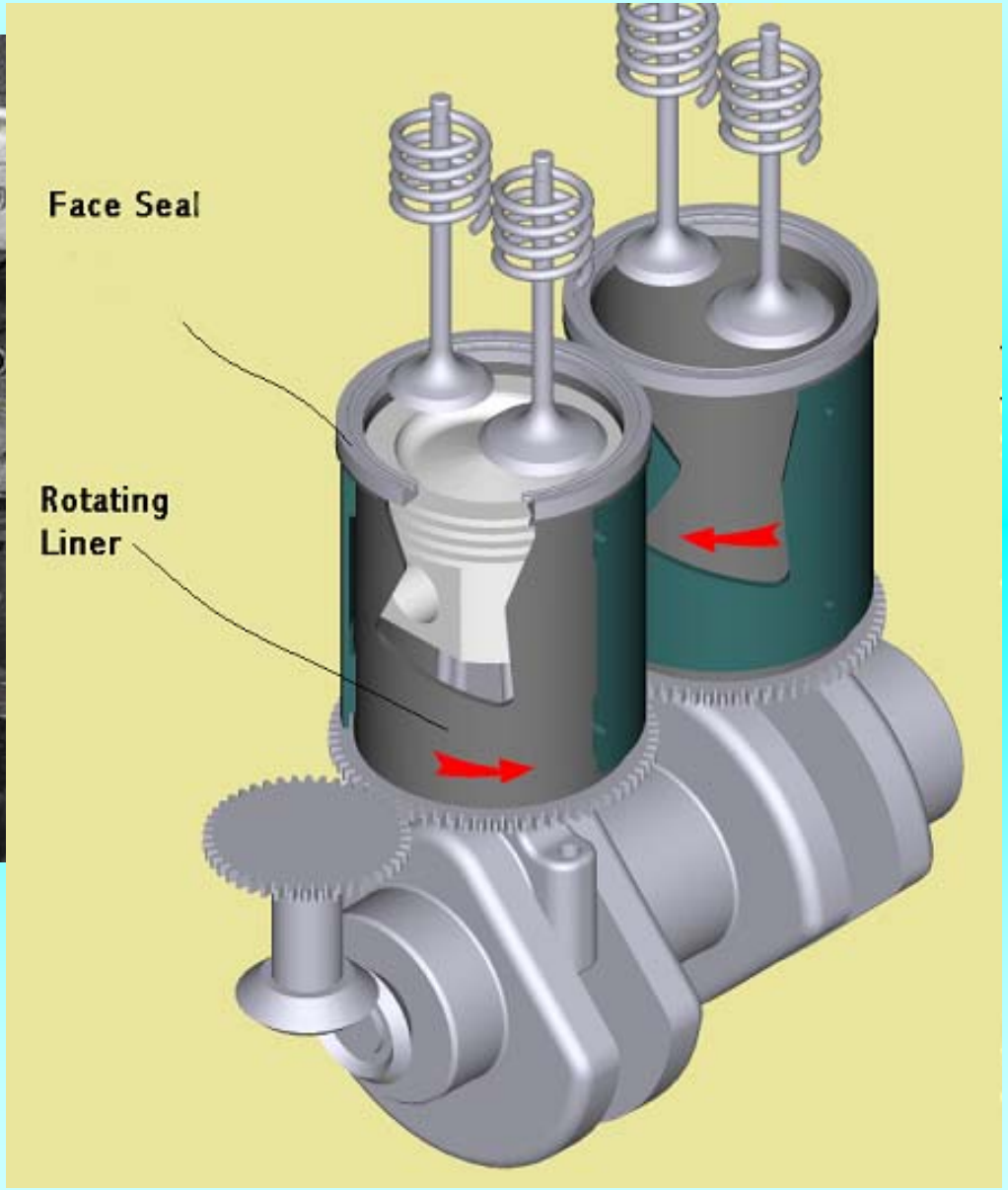

Seal installation in RLE prototype

- Head insert carries the lubricant to the seal and isolates head coolant from oil.
- Inboard O-ring is secondary seal for both gas pressure and oil.
- Outboard O-ring contains pressurized oil
- Pre-load by combination of oil pressure and coil springs (not shown)
- Used oil flows back to the sump.

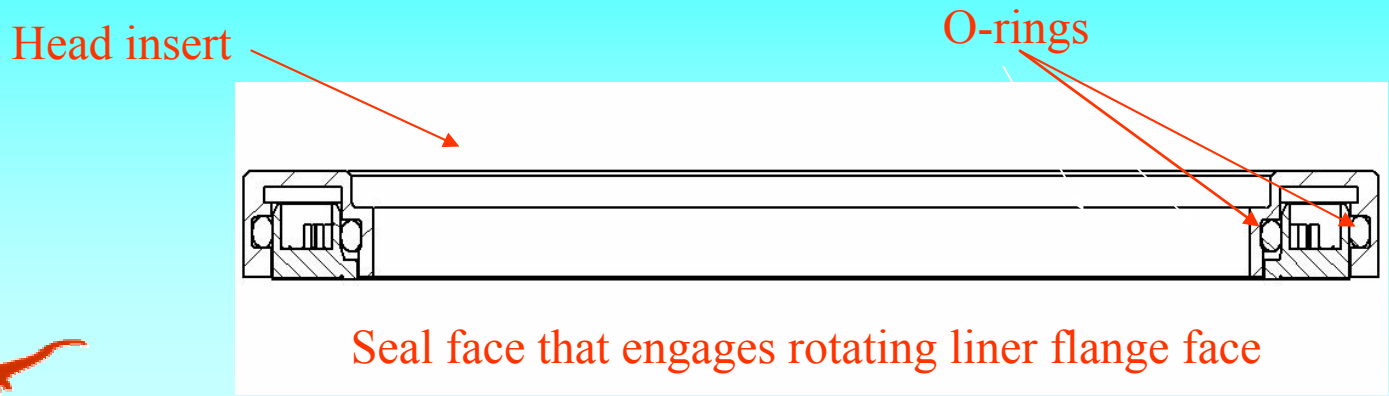

Seal Leak Down Testing

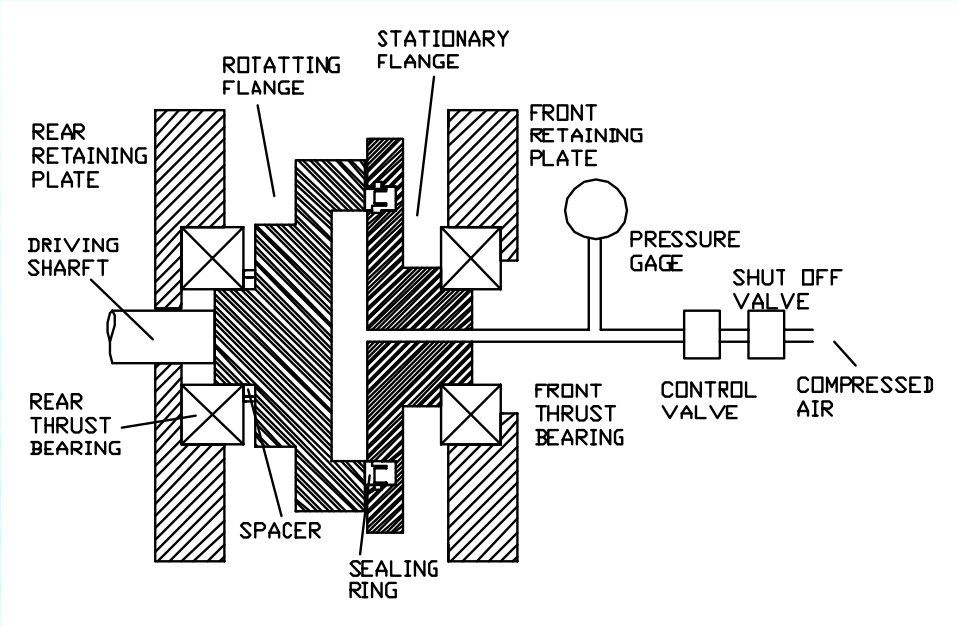

- Test rig allows both seal friction measurement and leak down testing
- Friction measurements in agreement to model predictions
- Leakage negligible. Pressure low but pressure exposure duration far longer than engine cycles.
- Inward oil leakage negligible

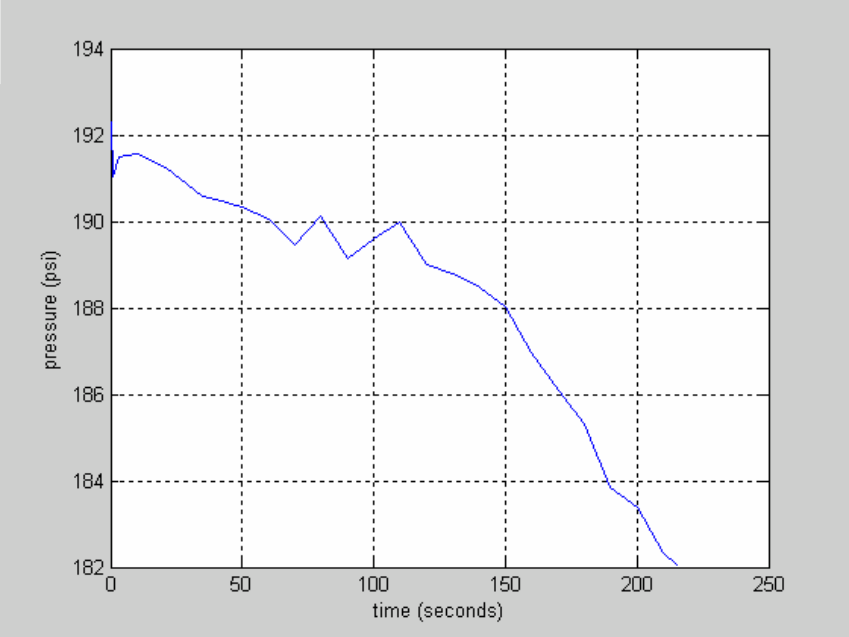

300 rpm liner speed
Leakage: 192-190 psi in 100 seconds
Typical engine cycle duration: ~50-100 ms