Microturbines

US DOE DER Road Shows

May, 2003

Capstone

Contact Information

Larry Guzy
Applications Engineer
Capstone Turbine Corporation

Regional Contact Information:
3333 Warrenville Rd., Suite 200
Lisle, IL 60532
Phone: 630-799-8284
E-mail: lguzy@capstoneturbine.com

© 2001 Capstone Turbine Corporation

What is a Microturbine?

- A Microturbine is a turbine engine-generator, typically sized 250 kW or less
- A way to supply continuous energy to a facility at the point of use
- Installed inside or near a building to provide electricity and optionally, heat
- Similar to a placing a furnace, boiler, backup genset, or chiller in a facility
- Approximately 3,000 Microturbines shipped worldwide

© 2001 Capstone Turbine Corporation

What's in it for you?

An opportunity to:

- Save money buying energy
  - Avoid penalty tariffs
  - Isolate loads to minimize demand charges
- Support energy conservation efforts
- Reduce environmental impact
  - Offset higher emission utility power
  - Reduce flare emissions
- Avoid power outages
  - Eliminate production and data losses
  - Provide power during emergencies
  - Isolate priority loads in problem power areas
- Potentially helps solve facility power problems
  - Produce power where needed
  - Provide power to remote sites

© 2001 Capstone Turbine Corporation

Microturbine Applications

Customer Motivations	Cost Savings	Power Availability	Power Generation	Power Quality	Environ. Compliance
Typical Application Segments	Agriculture, Hotel, Chemical	Health Care, Universities, Food Distrib.	Landfill, Mining, Wastewater	Communication, IT, Process Mfg	Petroleum, Process, Materials

Type of Service

Cogeneration	✓	✓	✓		✓
Peak Shaving	✓	✓	✓		✓
Prime Power			✓	✓	✓
Running Backup	✓	✓		✓	
Remote Power			✓	✓	

© 2001 Capstone Turbine Corporation

Microturbine Applications

Air Heating & Chilling: Indiana

Combined Heat and Power (CHP)

- Utilize both electricity and heat to increase efficiency to 70% - 90%
- Reduce greenhouse gases
- Provide air conditioning while reducing overall electrical load.

Absorption Chilling: California

© 2001 Capstone Turbine Corporation

Microturbine Applications

Flare Gas Reduction

- Uses Unprocessed Wellhead Gas
  - Up to 7% Sour (H_2S) gas
- Reduce Flare Gases
- Power Remote Sites

PanCanadian Installation in Alberta, Canada

Williams DPS Installation in Colorado

© 2001 Capstone Turbine Corporation

Microturbine Applications

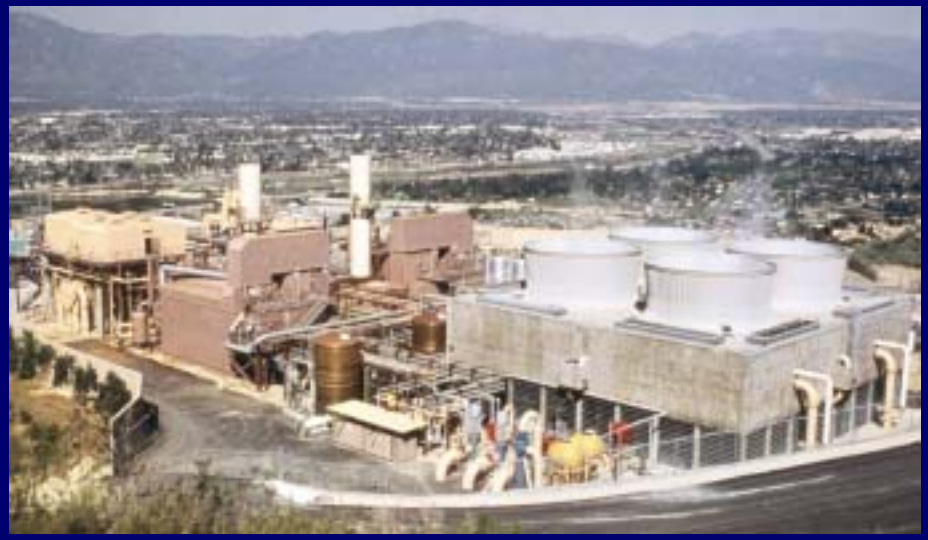

Landfill: World's 2nd Largest Landfill, in Puente Hills, California

Digester: System with Capstone Gas Booster Option at Palmdale Water Treatment Plant, California

Undergoing Independent Emissions Testing at Puente Hills Landfill

Digester: Industrial Enclosure with Separate Heat Recovery, Operating at a Water Treatment Plant in Pennsylvania

© 2001 Capstone Turbine Corporation

Microturbine Applications

Power Quality / Reliability

- Supply high-reliability power to critical and sensitive loads
- Eliminate outage costs
- Reduce reliance on grid during peak demand times
- 30/60 kW per module size provides low cost n + x redundancy

25 Multi-packed Capstone MicroTurbines w/ Trigen (cogeneration or combined heat & power + cooling) at a Plastics Manufacturing Plant in Upstate NY

© 2001 Capstone Turbine Corporation

Inside the Capstone MicroTurbine

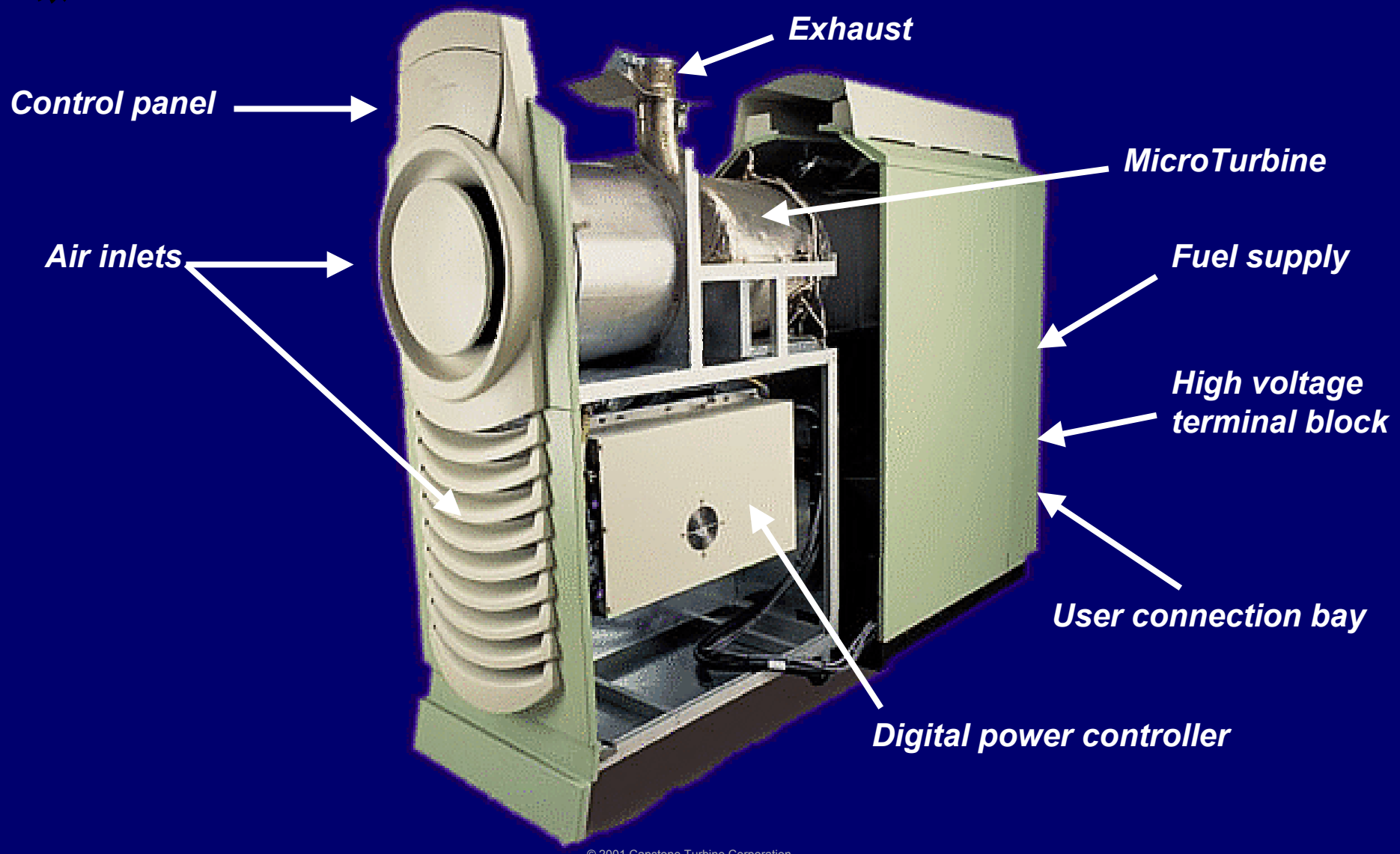

© 2001 Capstone Turbine Corporation

Inside the Capstone MicroTurbine

© 2001 Capstone Turbine Corporation

MicroTurbine Technology

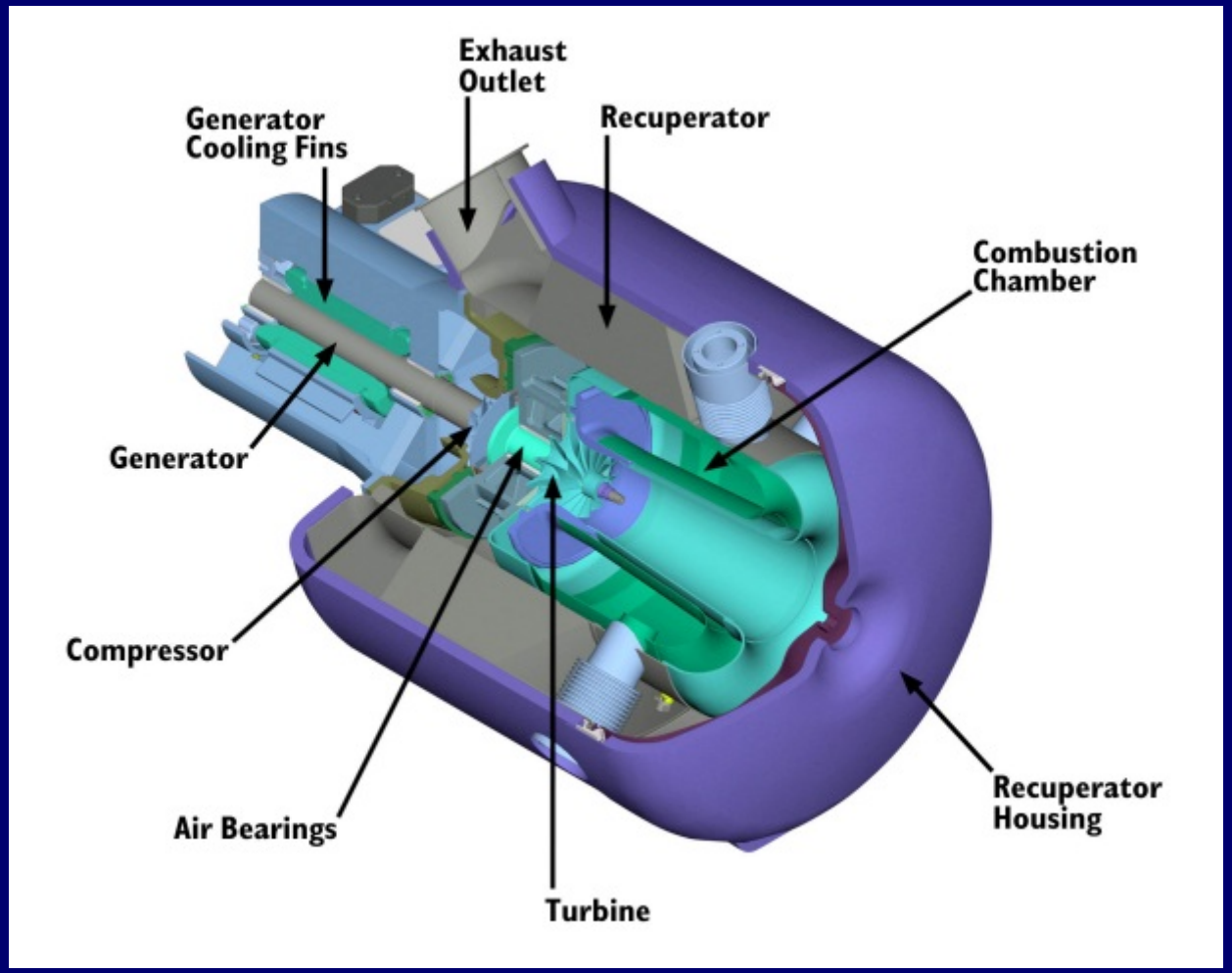

© 2001 Capstone Turbine Corporation

MicroTurbine Technology

- **Turbine inlet Air Flow** — 550 SCFM
- **Maximum Pressure Drop: (ambient to Compressor Inlet)** — 0.5 inch H_20
- **Exhaust Gas Flow** — 575 SCFM (~1100 CFM @ rated conditions)
- **Exhaust Gas Temperature (Max)** — 316 ^{0}C (600 ^{0}F)
- **Maximum Pressure Drop (Back-pressure - Exhaust Flange to ambient)** — 8.0 inch H_20

© 2001 Capstone Turbine Corporation

System Block Diagram

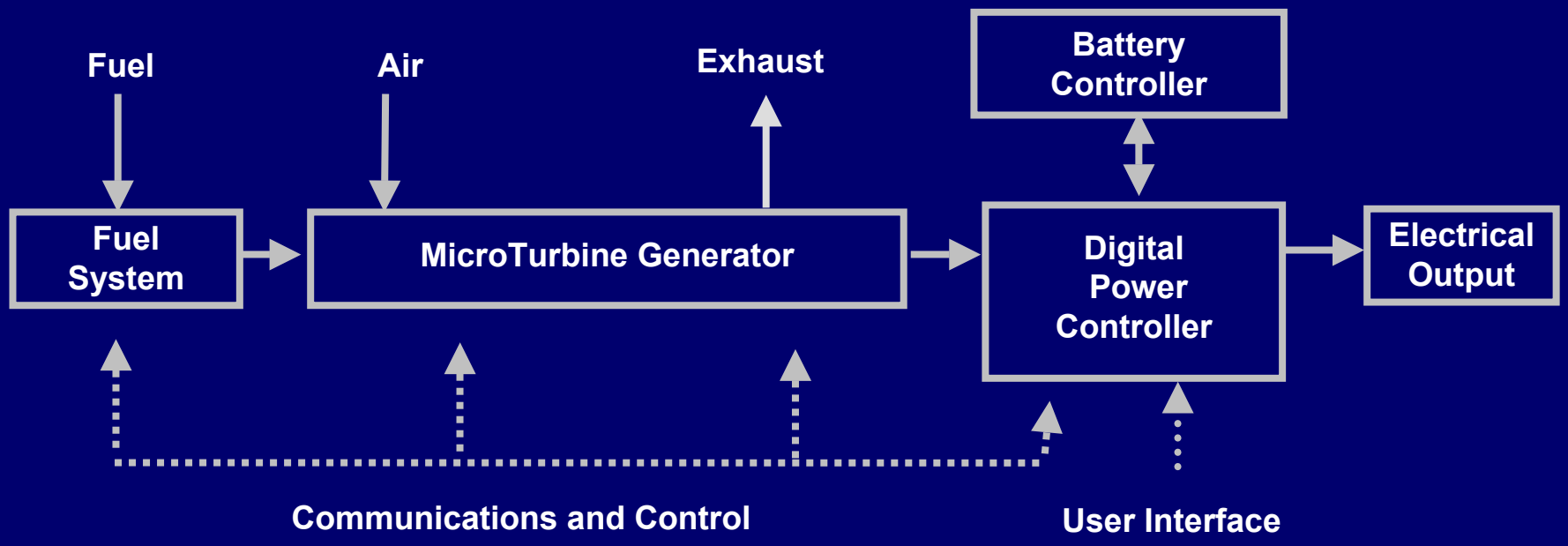

© 2001 Capstone Turbine Corporation

System Block Diagram - DPC Function

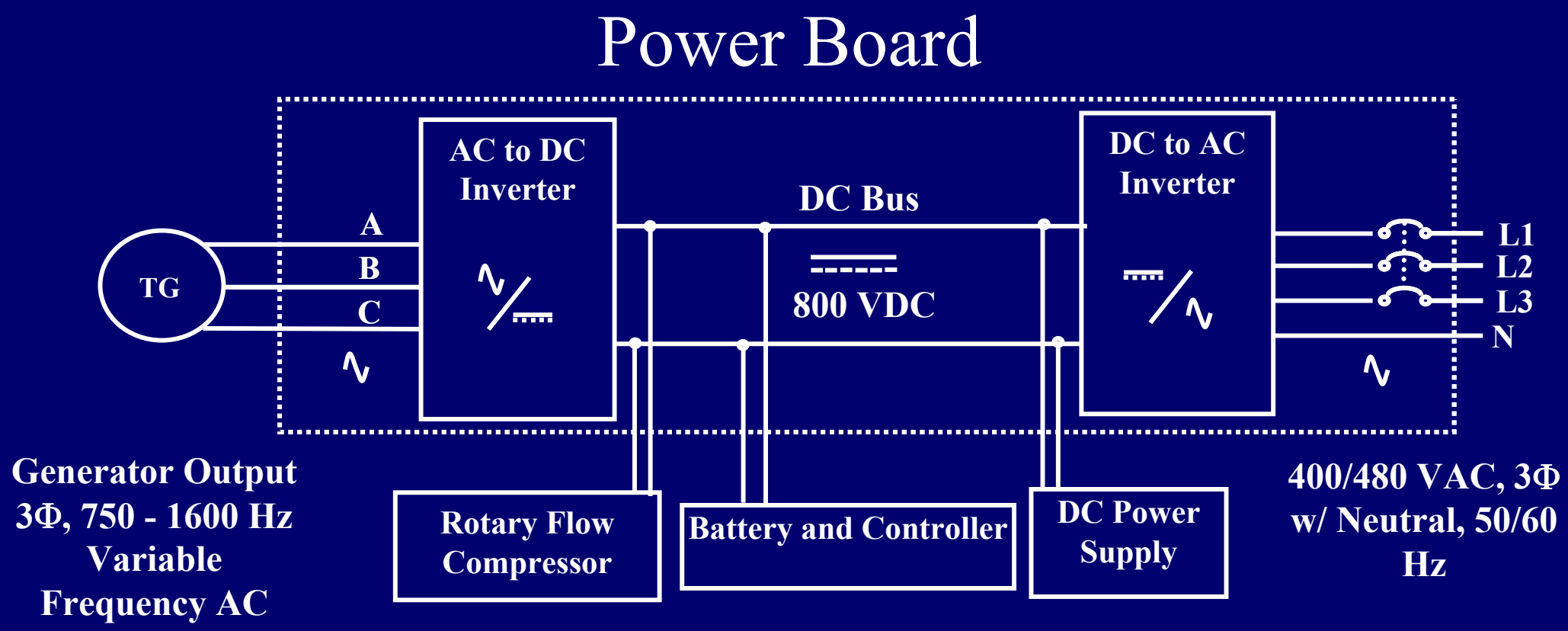

© 2001 Capstone Turbine Corporation

System Block Diagram – Grid Isolation

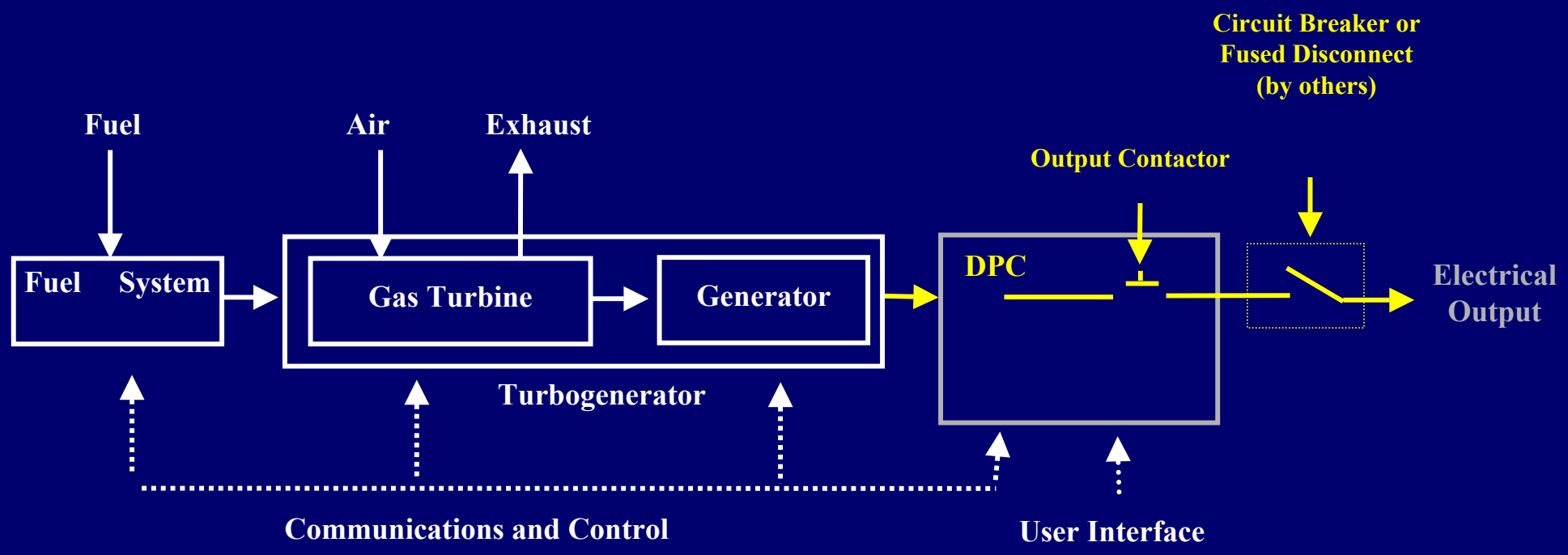

© 2001 Capstone Turbine Corporation

Installation Types – Single Unit using Internal Relays

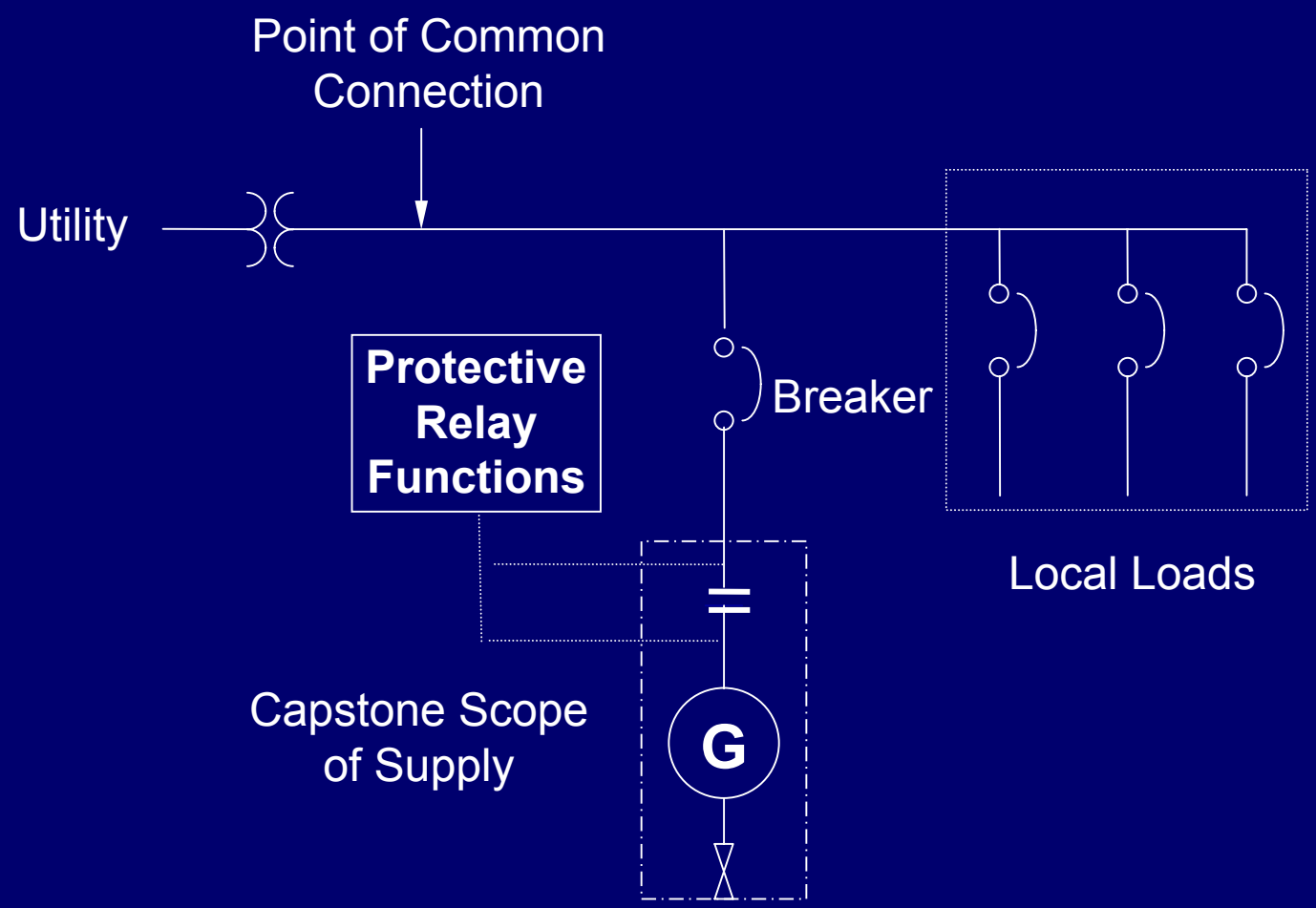

Protective Relay Functions are built into the Capstone MicroTurbine and shut the Microturbine down if an island is detected or if the voltage or frequency fall outside of their programmable setpoints

© 2001 Capstone Turbine Corporation

Installation Types – Single Unit w/ Reverse Power Flow Protection

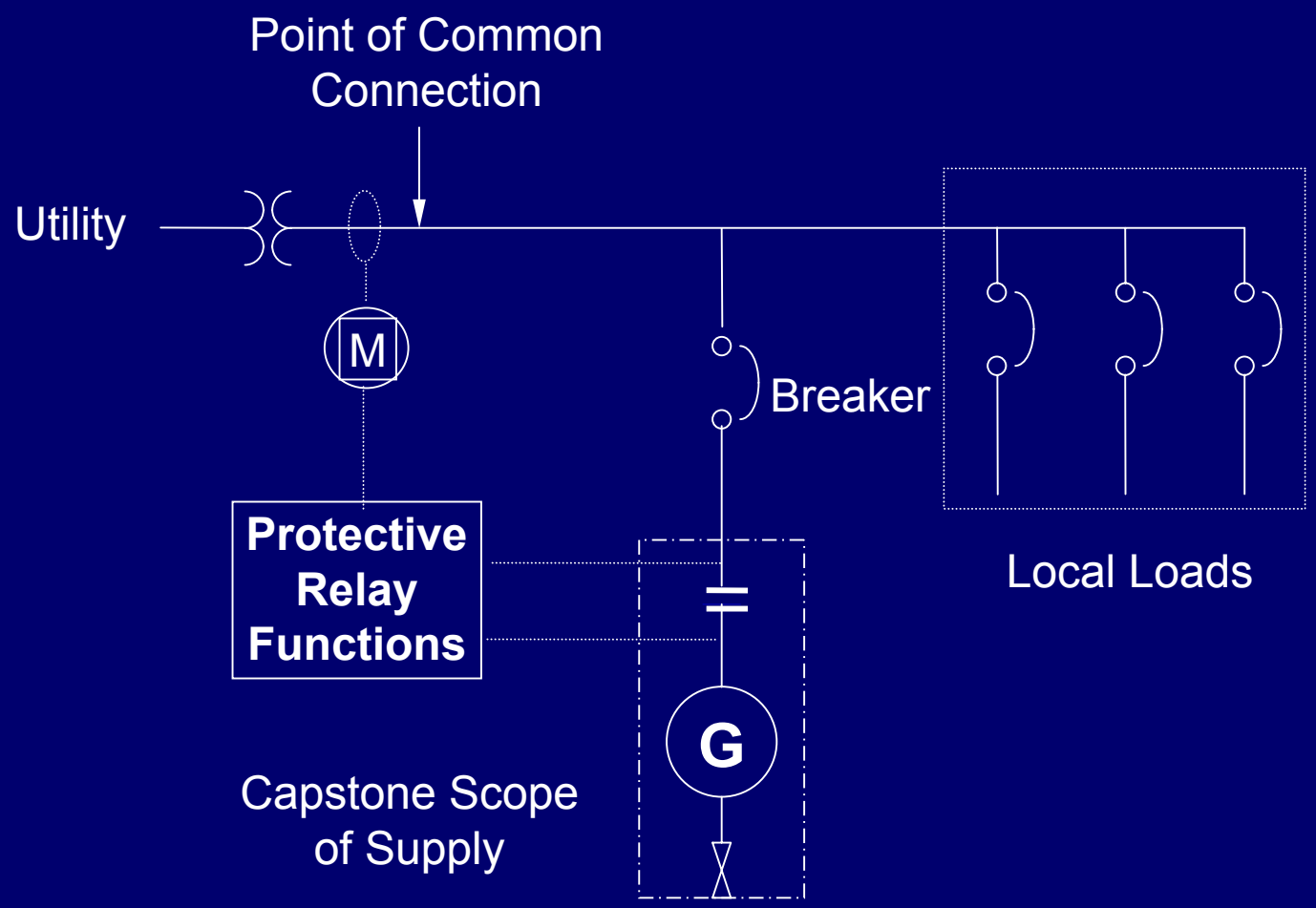

Reverse Power Flow protection requires the use of an external power meter

© 2001 Capstone Turbine Corporation

The Installation Process

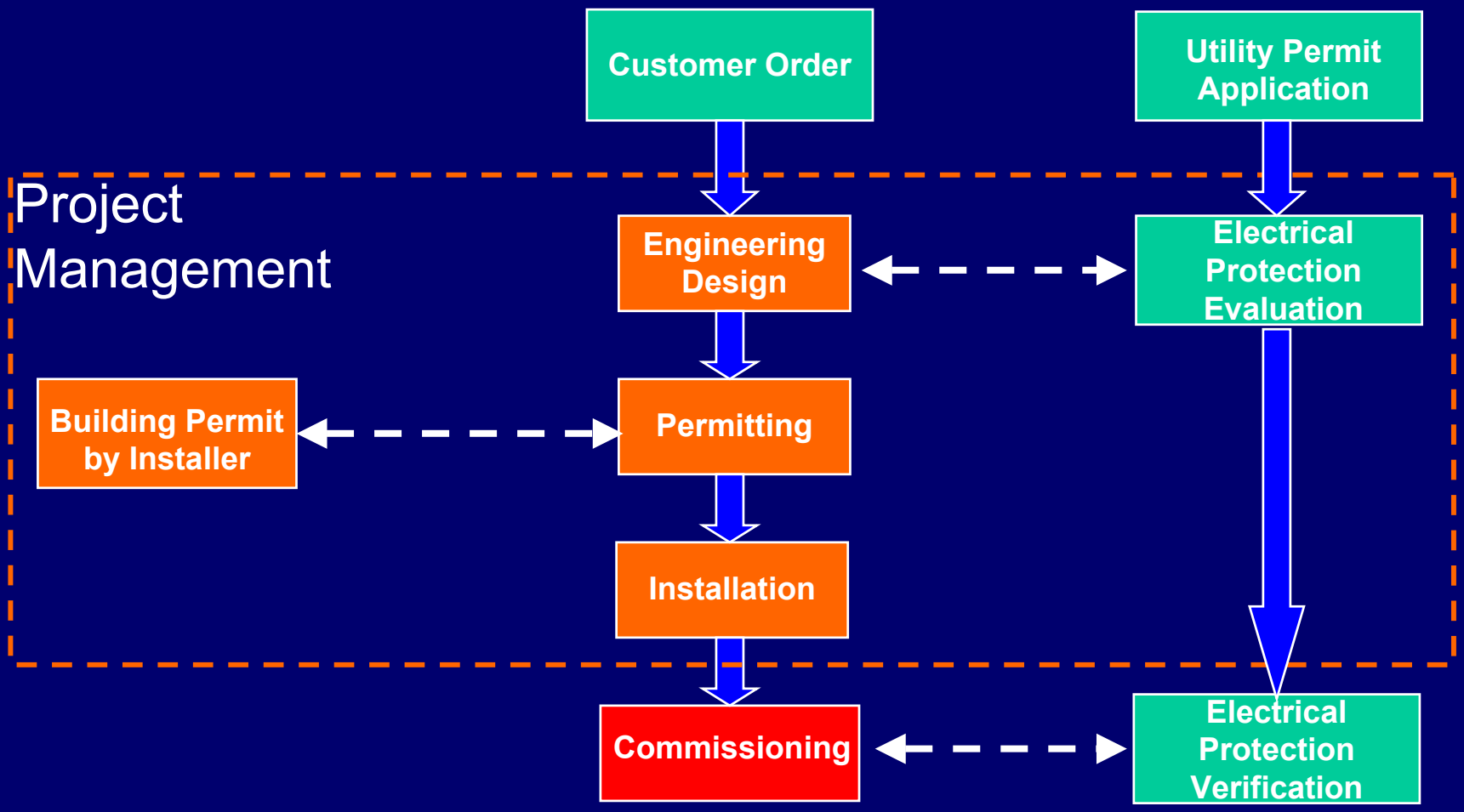

© 2001 Capstone Turbine Corporation

Installation Considerations

- **Mounting**
  - Siting indoor/outdoor or rooftop?
- **Public Access**
  - How do I limit public access?
- **Service Access**
  - Is there enough space to perform required maintenance and service tasks?
- **Fuel Supply**
  - Gas pressure high enough ?
    - Internal/external compressors available
- **Power Wiring**
  - How long will my cable runs need to be?
- **Control Wiring**
  - How long does my communications cable need to be?
- **Intake & Exhaust Air**
  - Is my intake and exhaust air adequate?
- **Exhaust Heat**
  - Is there a concern about the exhaust heat ducting or how it will be used?
- **Regulatory Requirements**
  - Electrical Interconnect Permit/Air Permit
  - Is UL approval required?
  - Which building and fire codes are applicable?

© 2001 Capstone Turbine Corporation

Typical Installation

Fused Disconnect Switch

Natural Gas Connection

© 2001 Capstone Turbine Corporation

Typical Installation

© 2001 Capstone Turbine Corporation

Typical Installation

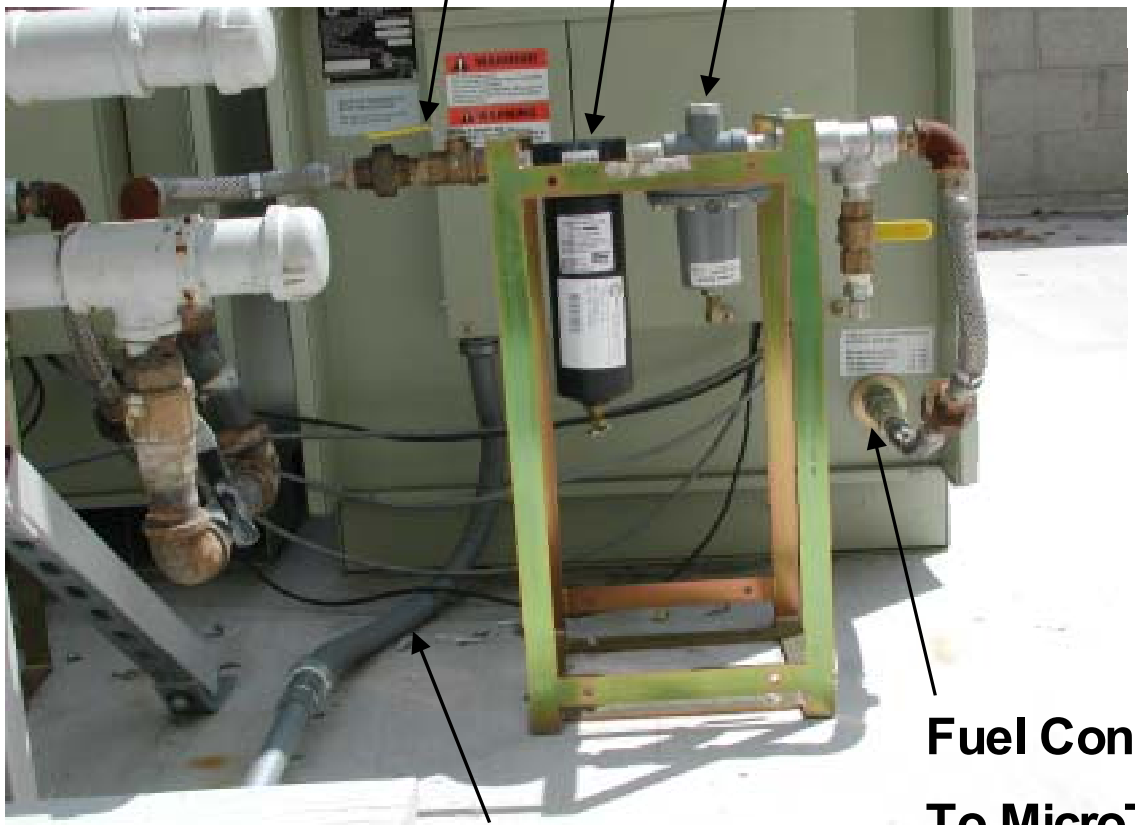

© 2001 Capstone Turbine Corporation

Applicable Standards and Codes

- UL 2200 Stationary Engine Generator Assemblies
- UL1741 Inverter, Converters, and Controllers for Use in Independent Power Systems
- UL508C Industrial Controllers
- NFPA 37 Stationary Combustion Engines
- NFPA 54 National Fuel Gas Code
- NFPA 70 National Electric Code
- ANSI C84.1 Electric Power Systems & Equipment Voltage Ratings (60Hz)
- ANSI 133.8 Gas Turbine Installation Sound Emissions
- CSA C22.2-100 Motors and Generators, Industrial Products
- Major building codes :
  - National Building Code
  - Uniform Building Code
  - Standard Building Code
- Existing Electrical Interconnect Standards
  - NY: PSC Standardized Interconnect Requirements
  - CA: Rule 21
  - TX: PUC Standardized Interconnect Requirements
  - IEEE P1547 National Interconnect Standard (pending)

© 2001 Capstone Turbine Corporation